Mathematical Programming Models and Solution Strategies for the Synthesis of Process Systems

Ignacio E. Grossmann
Center for Advanced Process Decision-making
Dept of Chemical Engineering,
Carnegie Mellon University
Pittsburgh, PA 15213

PASI 2011
Angra do Reis, R.J., Brazil
July 19-29, 2011

Carnegie Mellon

Sustainability and Energy systems

- Sustainability and energy have recently emerged as key problems

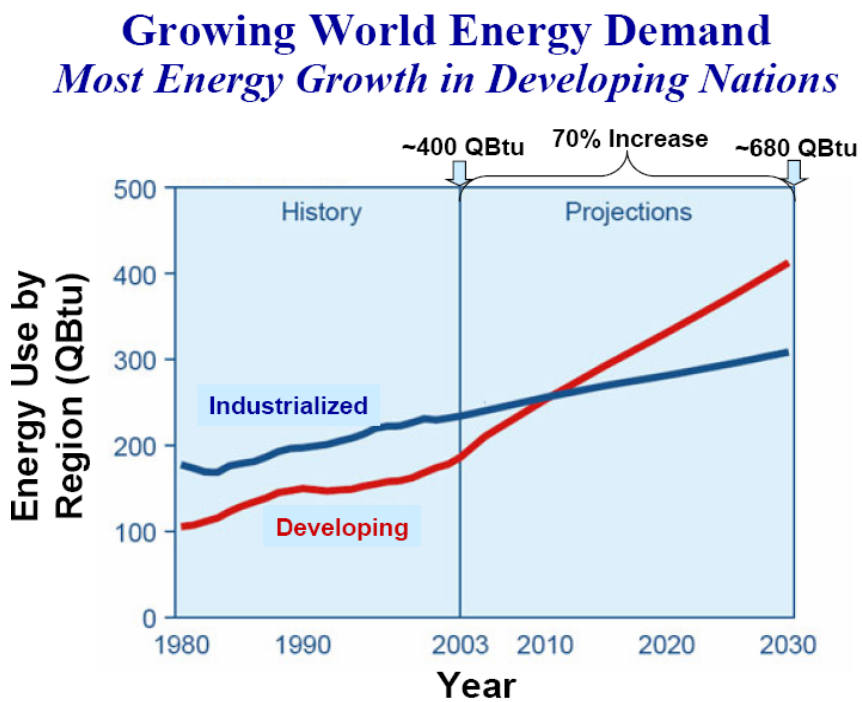

DOE EIA, International Energy Outlook 2006, Figure 8

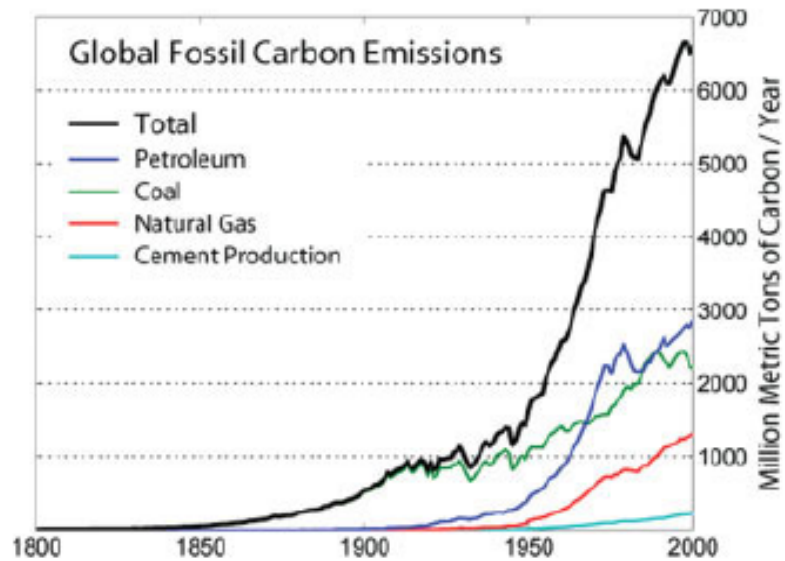

Sheppard, Socolow (2007)

Water scarcity

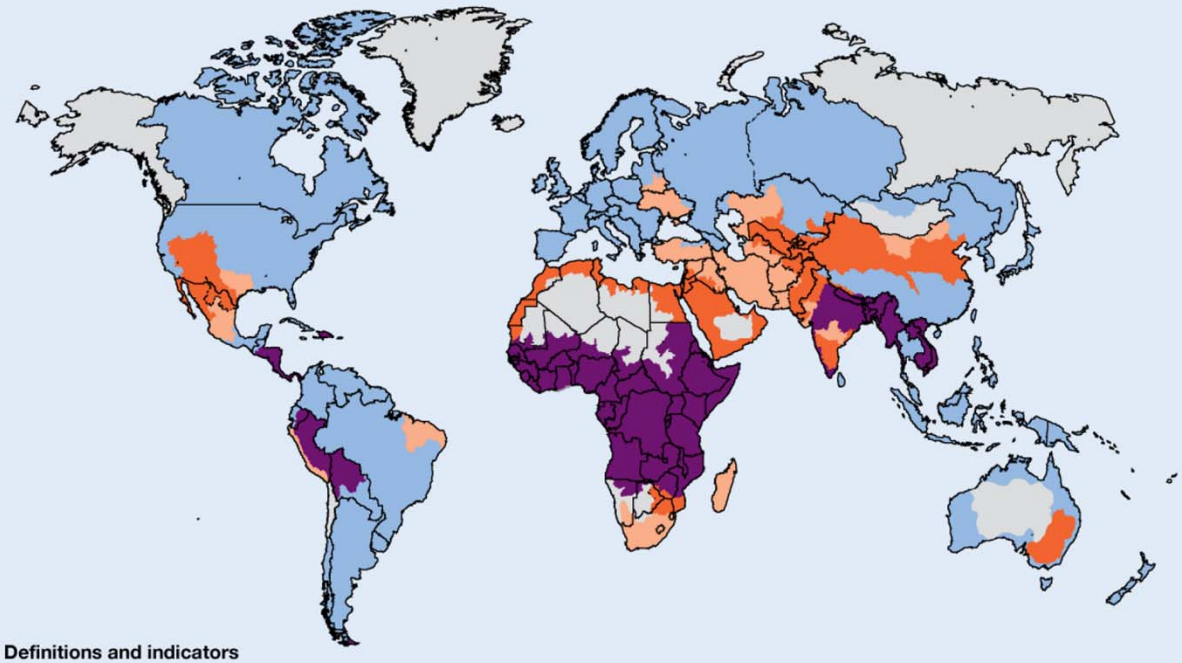

Definitions and indicators

- *Little or no water scarcity*. Abundant water resources relative to use, with less than 25% of water from rivers withdrawn for human purposes.
- *Physical water scarcity (water resources development is approaching or has exceeded sustainable limits)*. More than 75% of river flows are withdrawn for agriculture, industry, and domestic purposes (accounting for recycling of return flows). This definition—relating water availability to water demand—implies that dry areas are not necessarily water scarce.
- *Approaching physical water scarcity.* More than 60% of river flows are withdrawn. These basins will experience physical water scarcity in the near future.
- *Economic water scarcity (human, institutional, and financial capital limit access to water even though water in nature is available locally to meet human demands)*. Water resources are abundant relative to water use, with less than 25% of water from rivers withdrawn for human purposes, but malnutrition exists.

Source: International Water Management Institute analysis done for the Comprehensive Assessment of Water Management in Agriculture using the Watersim model; chapter 2.

Design of Sustainable Processes requires Process Synthesis Techniques

Design or Synthesis?

Webster Dictionary

Design: The creation of something in the mind.

Oxford Dictionary

Design: a plan or drawing produced to show the look and function or workings of something <u>before it is built or made</u>

Oxford and Webster

Synthesis: the <u>combination of components</u> to form a connected whole

Synthesis: *invention of new systems, configurations*

Goal: Optimal Design

Major Areas: Process Systems Engineering

Design

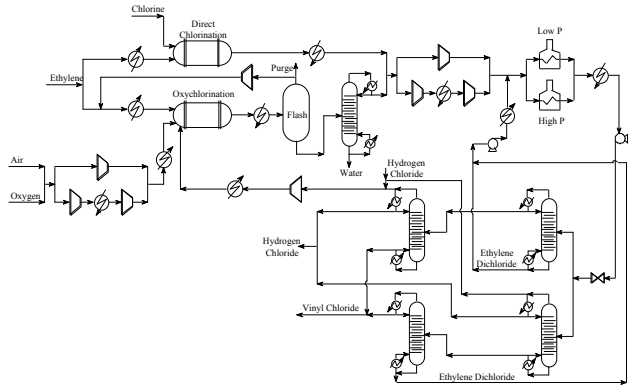

Control

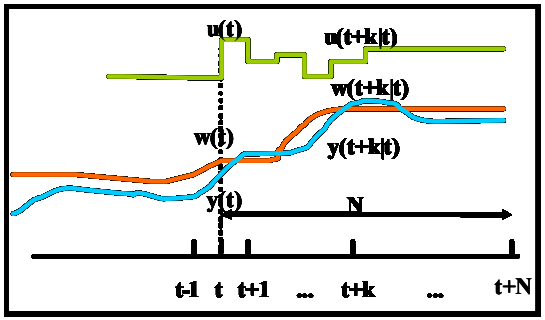

Synthesis Key Problem

Operations

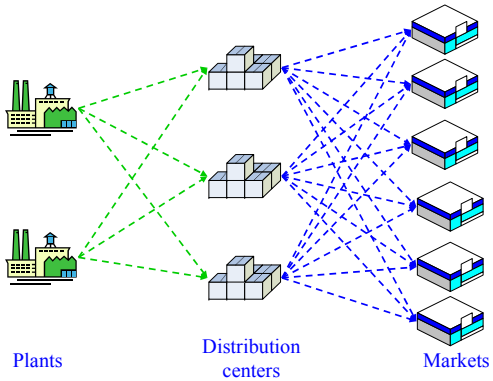

Process Synthesis

The **generation** of process flowsheet **alternatives**

(Rudd, Powers, Siirola, 1973)

Given inputs and desired outputs:

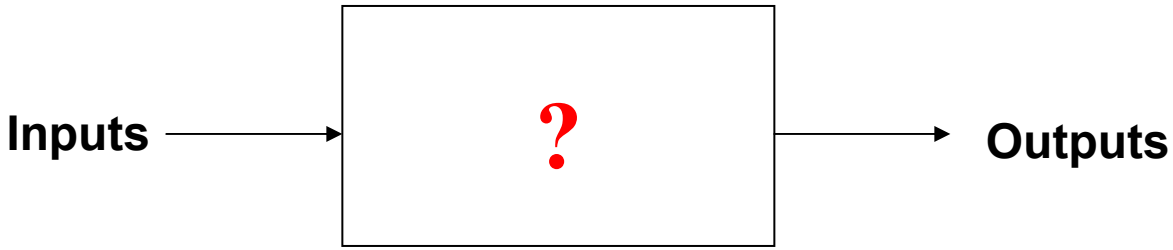

Phenomena to exploit?

Equipment to implement?

Interconnections?

Subsystems

- Heat exchanger network synthesis
- Separation systems: Distillation systems
- Reactor networks
- Reaction pathways
- Steam and Power plants
- Water networks, mass exchange networks

Basic representations

Process flowsheets

Basic methodologies

Pinch Analysis – Heat exchanger networks

(Hohmann, Linnhoff)

Target min heating/min cooling

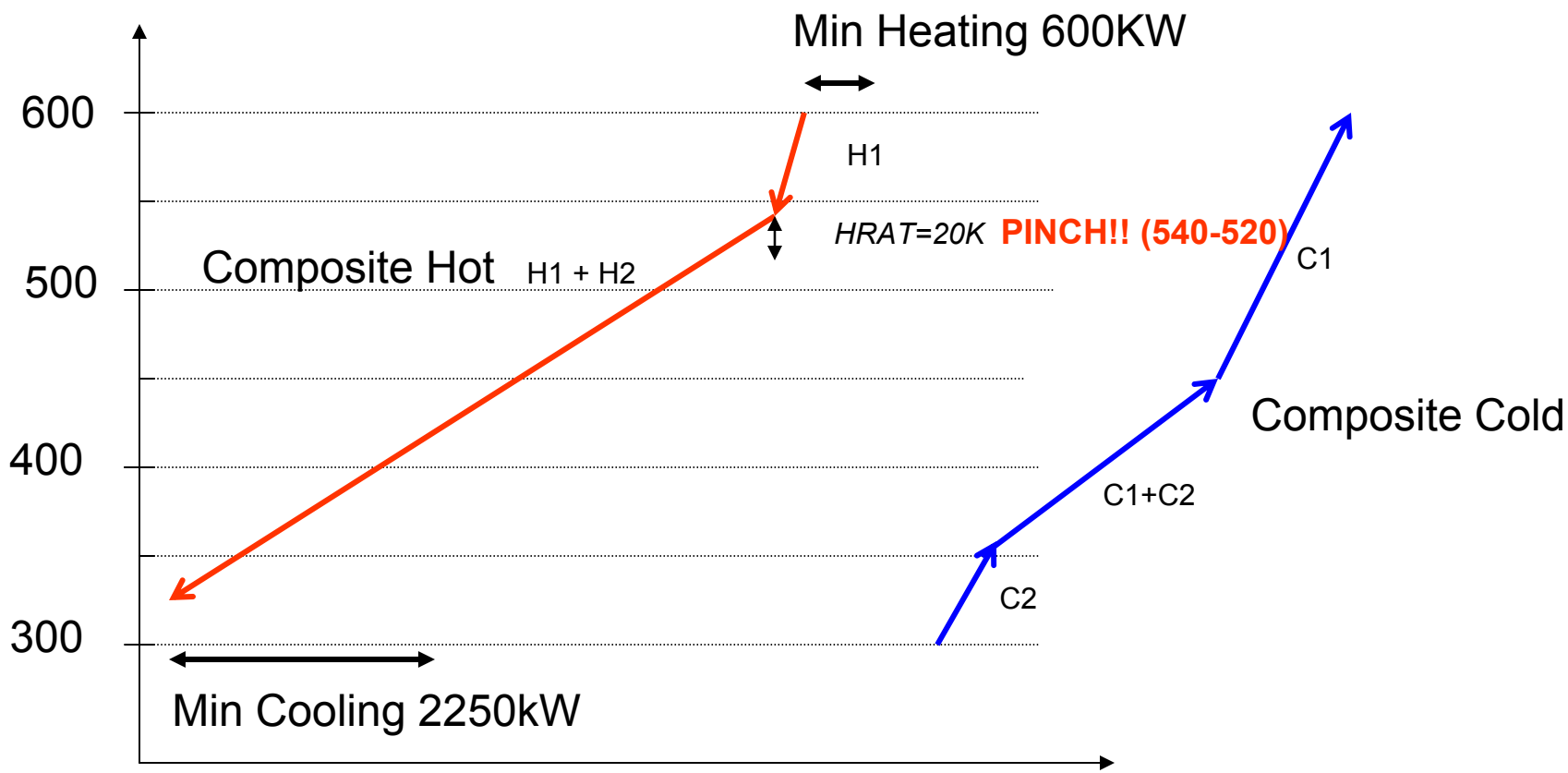

Distillation boundaries - Azeotropic Distillation

(Doherty, Perkins)

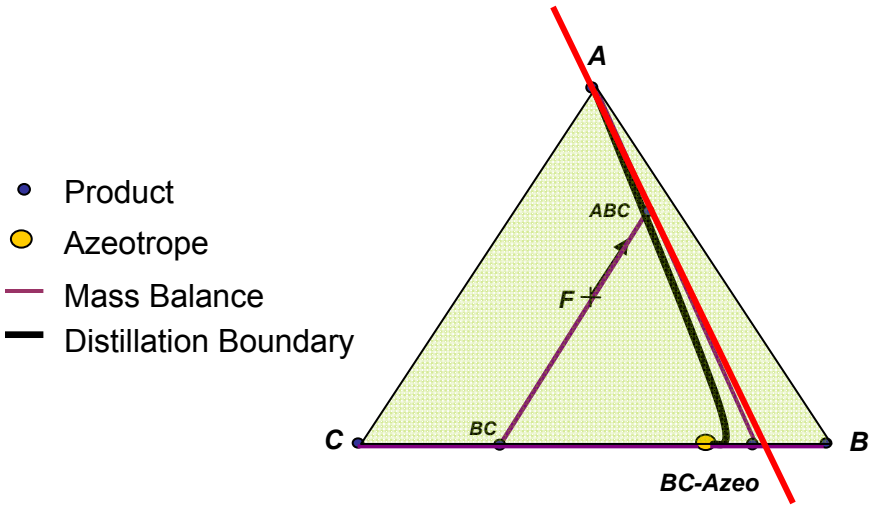

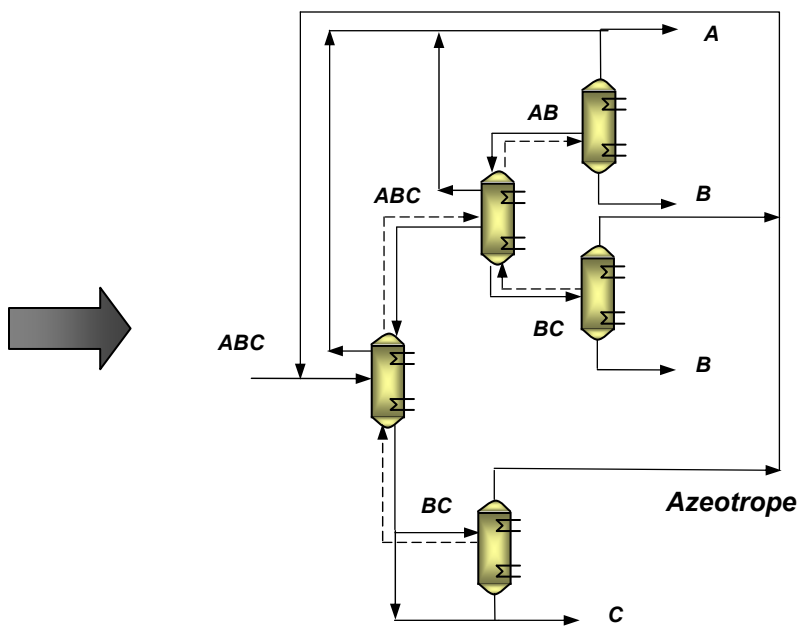

Attainable region - Reactor Networks

(Glasser, Hildebrandt)

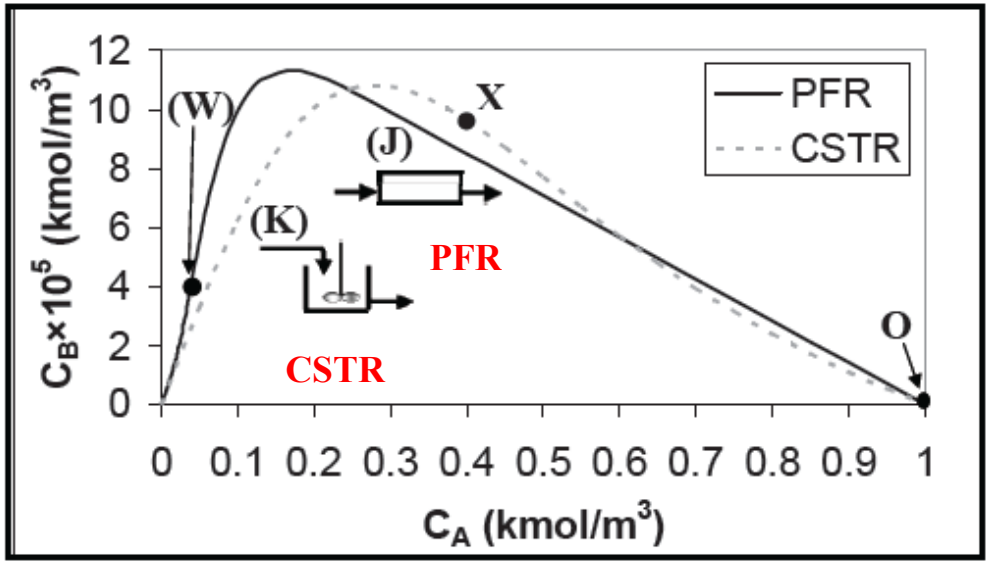

Subsystems and Process Flowsheets

- **Evolutionary Search**
  - Start with base case *(Stephanopoulos, Westerberg)*
- **Systematic Generation**
  - Means-Ends Analysis *(Siirola, Powers)*
  - Hierarchical decomposition *(Douglas)*
- **Superstructure Optimization**
  - NLP optimization *(Sargent, Gaminibandara)*
  - MINLP, Generalized Disjunctive Programming *(Grossmann)*

Hierarchical decomposition

Douglas (1988)

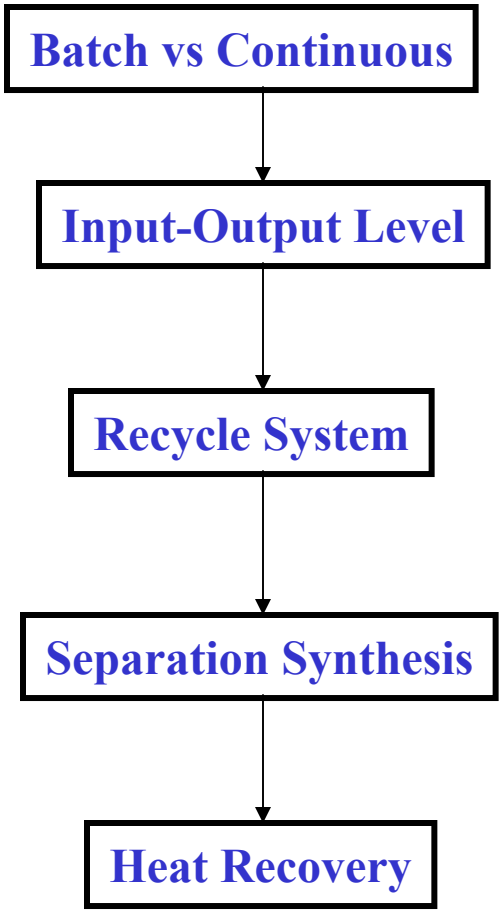

Math Programming Approach to Process Synthesis

1. Develop a superstructure of alternative designs

2. Develop an NLP or (MINLP, GDP) model to select topology and parameters of design

3. Solve NLP or (MINLP, GDP) model to extract optimum design embedded in superstructure

NLP = Nonlinear Programming
MINLP = Mixed-integer nonlinear programming
GBD = Generalized Disjunctive Programming

Challenges

Postulating superstructure

Capturing all the alternatives

Understanding implications for modeling

Model formulation

Predicting performance: equations

Capturing logic: constraints

Solution algorithm

Exponential behavior due to combinatorics

Overcoming nonconvexities

State Task Network

Kondili, Pantelides, Sargent (1993)
Yeomans, Grossmann (2000)

•**First step: State and Task Identification in process flowsheet.**

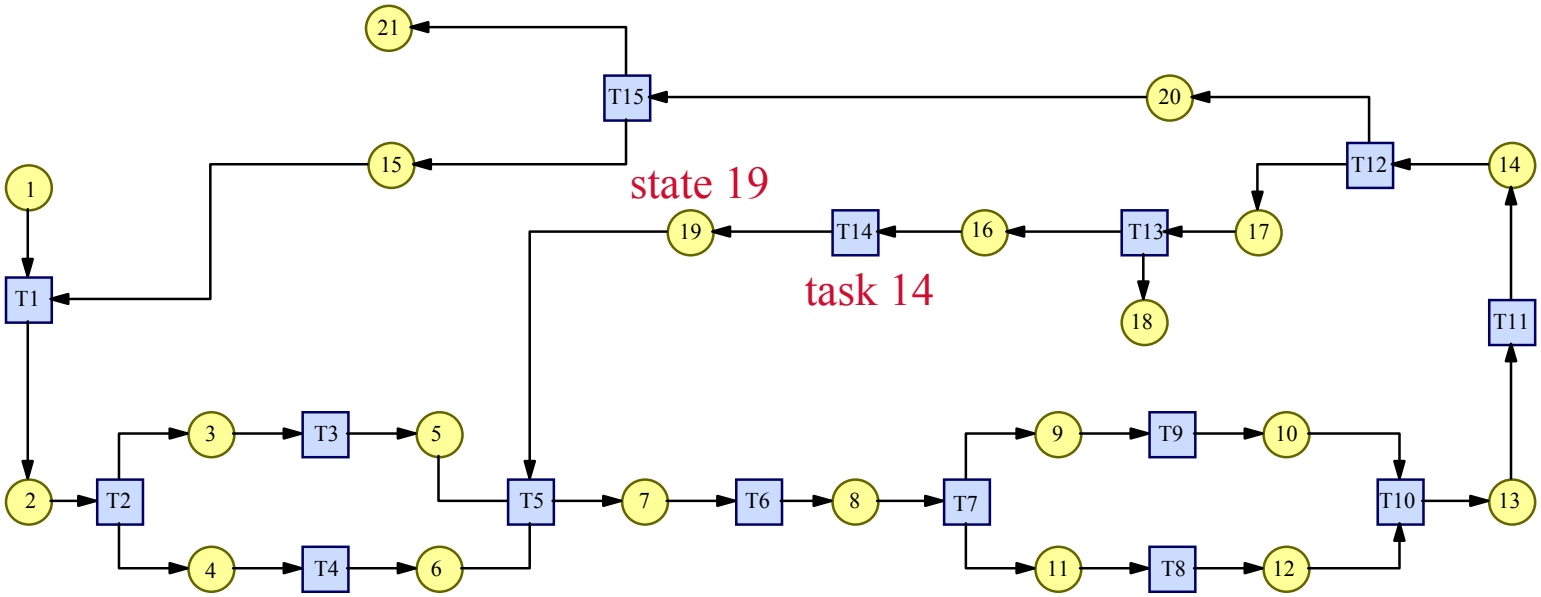

STATES:

1- A Raw, V, Low P
2- A mixed, V, Low P
3- A mixed, V,Low P to T3
4- A mixed, V,Low P to T4
5- A,V, High P form T3
6- A, V, High P form T4
7- A, V,High P, to preheat
8- A,V High P, High T
9- A ,V to packed reactor
10- A+B, V to mixer T10
11- A, V , to PFR
12- A+B, V to mixer T10
13- A+B, V to cooler
14- A+B, L to flash.
15- A+B, Rich in A, V, from purge splitter
16- A,V, low P
17- A+B, L, to distillation
18- B, L, Final Product
19- A, V, High P
20- A+B, V to purge
21- A+B, V, waste product

TASKS:

1- Mix recirc A and raw A
2- Split feed mixture
3- Compress in single stage
4- Compress in two stages
5- Mix compressed streams and recycle.
6- Preheat for reaction
7- Split to reactors
8- React A->B in the vapor phase in PFR
9- React A->B in vapor phase with catalizer C in packed reactor
10- Mix reactor outlets, Vapor
11- Condense stream
12- Flash A+B: A+B vapor, B liquid
13- Distillate A+B: A liquid, B liquid
14- Compress col. vapor outlet
15- Purge vapor stream

OTOE Assignment for STN

Predetermined Equipment Assignment: One Task One Equipment

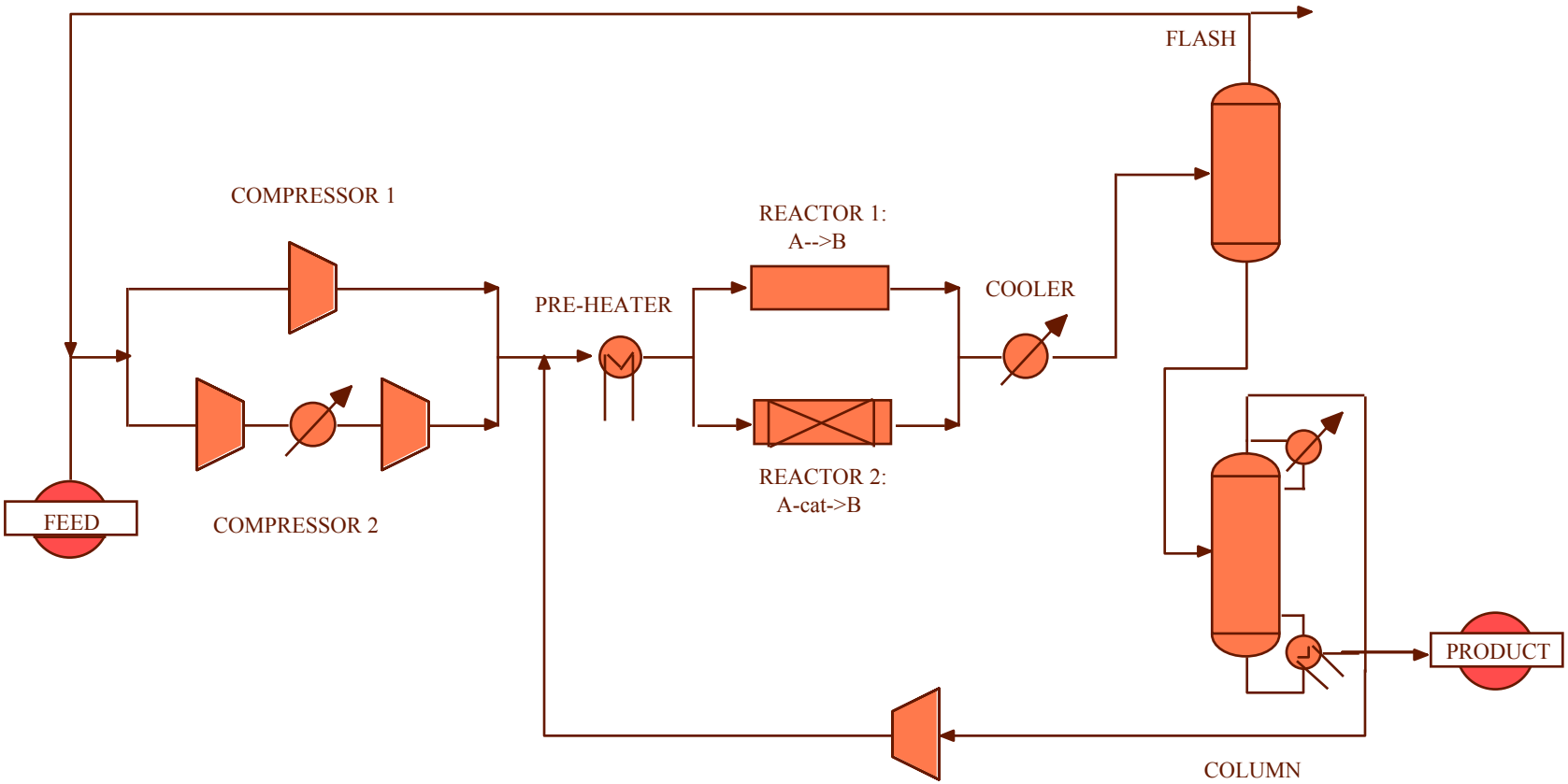

VTE Assignment for STN

Assignment left over for optimization: Variable Task Equipment

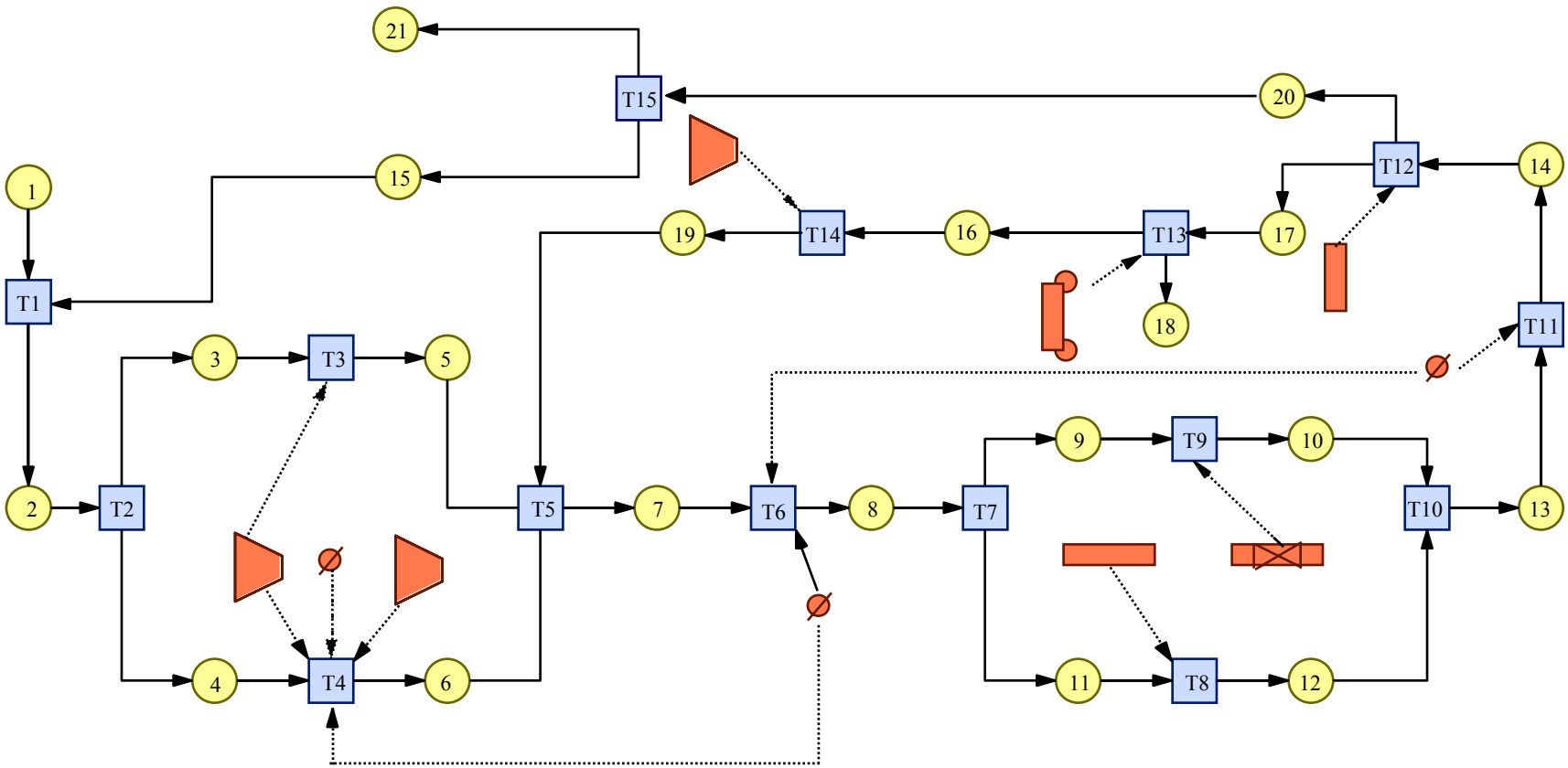

State Equipment Network (SEN)

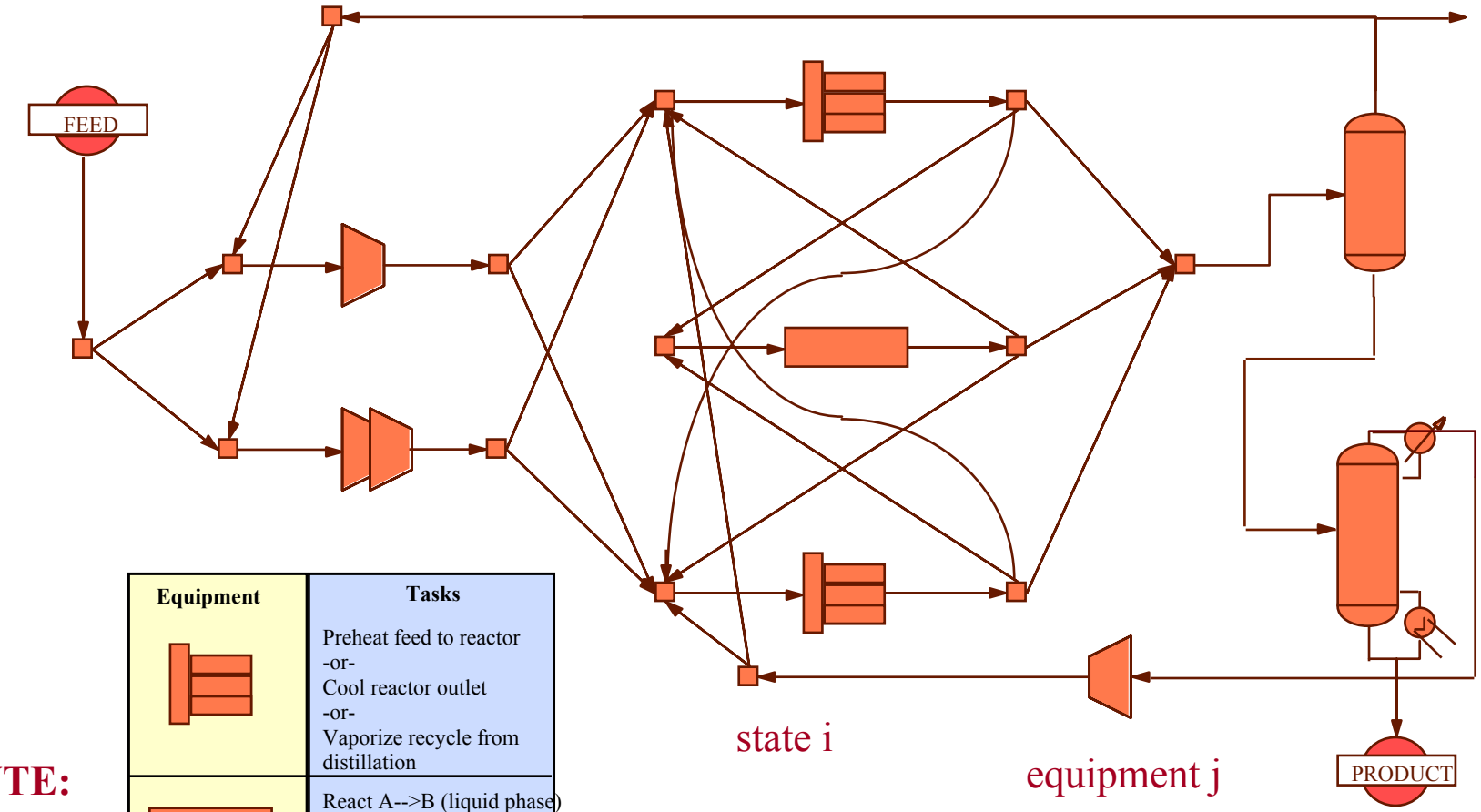

VTE:

Equipment	Tasks
	Preheat feed to reactor -or- Cool reactor outlet -or- Vaporize recycle from distillation
	React A-->B (liquid phase) -or- React A-cat->B in packed reactor (vapor phase)
1 stage 2 stage 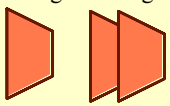	Compress Recycle -or- Compress Feed

State-Space Superstructure *Bagajewicz and Manousiouthakis (1992)*

Synthesis of mass exchanger networks for bach proceses

Li-Juan Li, Rui-Jie Zhou
Hong-Guang Dong (2010)

Distribution Network

Operators

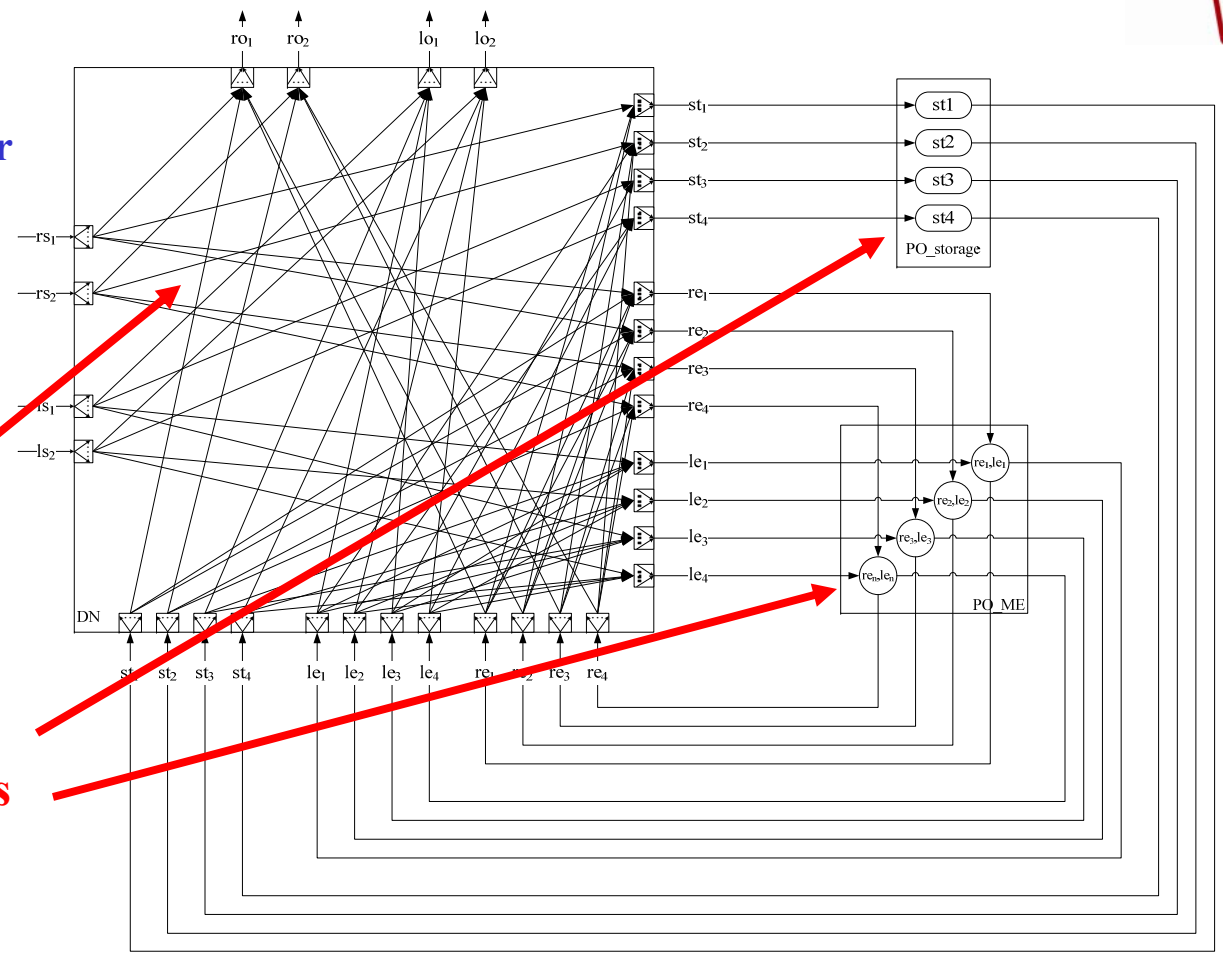

- The inlet of each stream is denoted as a splitting node, and the outlet as a mixing node
- Each mass exchanger is identified by two splitting and mixing nodes, representing the rich and lean sides.
- Each storage tank is expressed as one splitting and mixing node.

Nonlinear Programming (NLP)

$$\min Z = f(x)$$

$$s.t. \quad h(x) = 0$$

$$g(x) \le 0$$

$$x \in R^n$$

LP Codes:

CPLEX, XPRESS, GUROBI, XA

NLP Codes:

BARON *Sahinidis et al. (1998)*
CONOPT *Drud (1998)*
Couenne *Belotti, Margot (2008)*
IPOPT *Waechter & Biegler (2006)*
Knitro *Byrd, Nocedal, Waltz (2006)*
MINOS *Murtagh, Saunders (1995)*
SNOPT *Gill, Murray, Saunders(2006)*

Mixed-integer Nonlinear Programming (MINLP)

$$\min Z = f(x, y)$$

$$s.t. \quad h(x, y) = 0$$

$$g(x, y) \leq 0$$

$$x \in R^n, \quad y \in \{0,1\}^m$$

MILP Codes:

CPLEX, XPRESS, GUROBI, XA

MINLP Codes:

DICOPT (GAMS) *Duran and Grossmann (1986)*
a-ECP *Westerlund and Peterssson (1996)*
MINOPT *Schweiger and Floudas (1998)*
BARON *Sahinidis et al. (1998)*
MINLP-BB (AMPL)*Fletcher and Leyffer (1999)*
SBB (GAMS) *Bussieck (2000)*
Bonmin (COIN-OR) *Bonami et al (2006)*
FilMINT *Linderoth and Leyffer (2006)*
Couenne *Belotti, Margot (2008)*

Generalized Disjunctive Programming (GDP)

$$\min Z = \sum_k c_k + f(x)$$

Raman, Grossmann (1994)

$$s.t. \quad r(x) \le 0$$

$$\bigvee_{j \in J_k} \begin{bmatrix} Y_{jk} \\ g_{jk}(x) \le 0 \\ c_k = \gamma_{jk} \end{bmatrix} \quad k \in K$$

Disjunctions

$$\Omega(Y) = true$$

Logic Propositions

$$x \in R^n, \; c_k \in R^1$$

$$Y_{jk} \in \{ true, false \}$$

Boolean Variables

Methods Generalized Disjunctive Programming

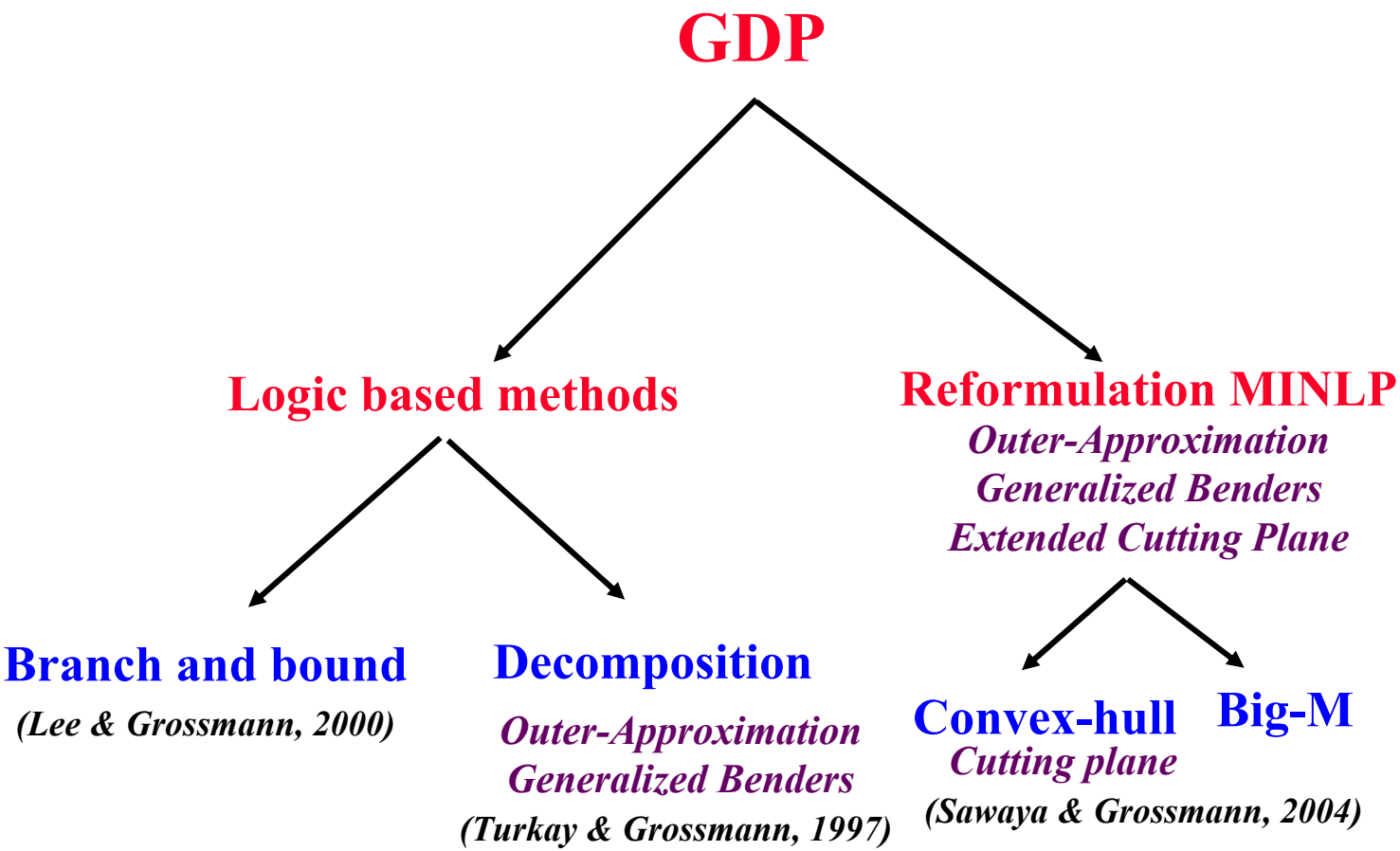

Code: LOGMIP *(Vecchietti, Grossmann, 2001)*
EMP *(GAMS)*

Global Optimization Algorithms

Algorithms are based on spatial branch and bound method and rely on rigorous lower bounds to the global optimum

•Nonconvex NLP/MINLP

- **αBB** *(Adjiman, Androulakis & Floudas, 1997; 2000)*
- **BARON (Branch and Reduce)** *(Ryoo & Sahinidis, 1995, Tawarmalani and Sahinidis (2002))*
- **OA for nonconvex MINLP** *(Kesavan, Allgor, Gatzke, Barton, 2004)*
- **Branch and Contract** *(Zamora & Grossmann, 1999)*

•Nonconvex GDP

- **Two-level Branch and Bound** *(Lee & Grossmann, 2001)*
- **Strengthening basic steps** *(Ruiz, Grossmann, 2010)*

Types of Models

Aggregated models

High level representations => synthesis problem greatly simplified

Transshipment model HENS/MENS *(Papoulias, Grossmann, 1983; El-Halwagi, Maniousiouthakis, 1989)*

Distillation Sequences *(Papalexandri, Pistikopoulos, 1996; Caballero, Grossmann, 1999)*

Reactor networks *(Balakrishna, Biegler, 1992; Kravanja, Bedenik, Pahor, 2003)*

Short cut models

Detailed superstructures with cost optimization but simple performance models

HENS: *(Yee at al., 1990; Ciric and Floudas, 1991)*

Distillation sequences: *(Aggrawal, and Floudas, 1990; Yeomans and Grossmann, 1998)*

Process flowsheets: *(Kocis and Grossmann, 1989; Türkay and Grossmann, 1996; Lee et al, 2003)*

Rigorous models

Detailed superstructures with rigorous and complex models

Synthesis of distillation sequences *Bauer, Stichlmair (1996,1998), Smith and Pantelides (1995), Yeomans, Grossmann (2000), Barttfeld, Aguirre, Grossmann (2004), Caballero, Milan-Yanez ,Grossmann (2005)*

Aggregate Model: Transshipment Model for Heat Flows

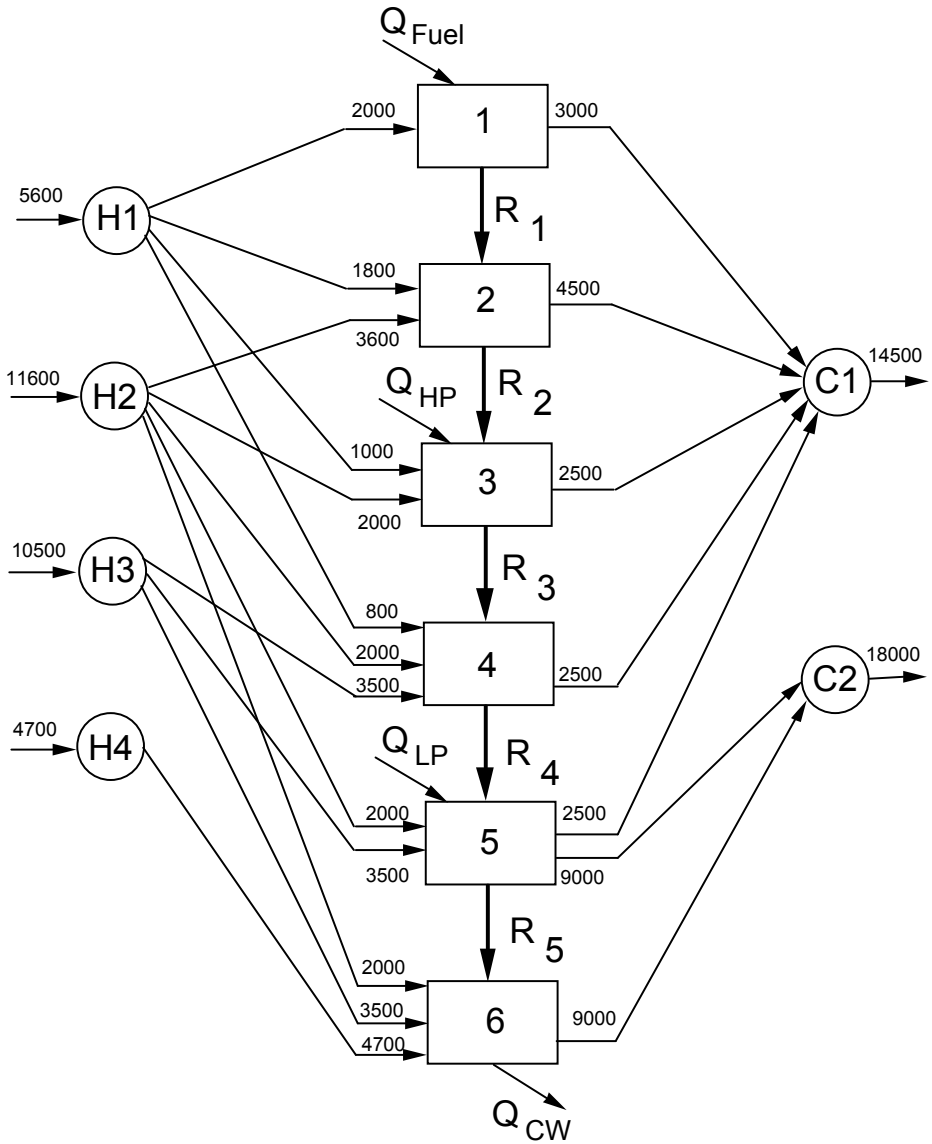

Unknowns:

a) Utility loads

$Q_{Fuel}, Q_{HP}, Q_{LP}, Q_{CW}$

b) Heat residuals:

$R_1, \ldots R_5$

LP transshipment model

Known parameters: Q_{ik}^{H}, Q_{jk}^{C} **heat contents of hot stream *i* and cold stream *j* in interval *k***

c_m, c_n **unit costs of hot utility *m* and cold utility *n***

Variables: Q_m^S, Q_n^W **heat loads of hot utility *m* and cold utility *n***

R_k **heat residual exiting interval *k***

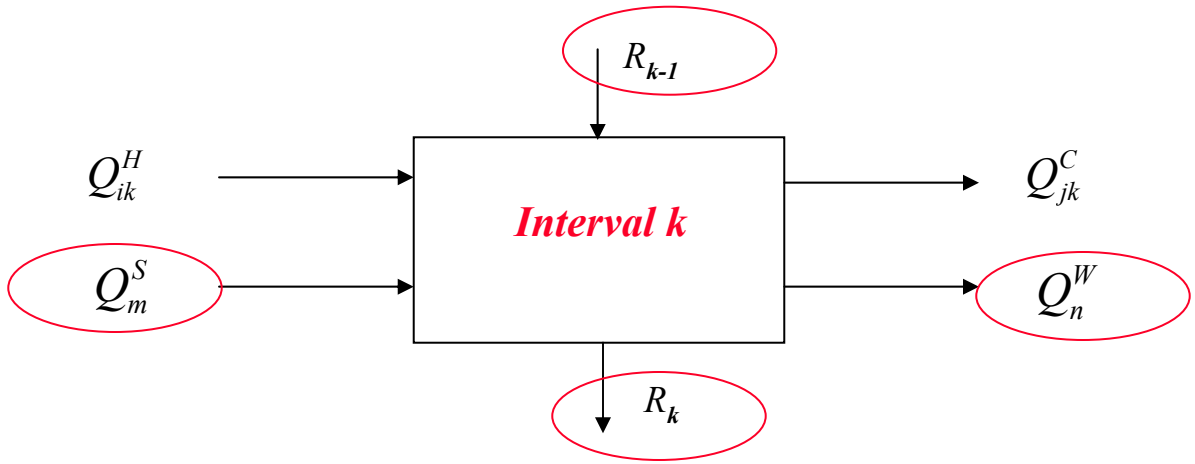

Linear Program

$$\min C = \sum_{m \in S} c_m Q_m^S + \sum_{n \in W} c_n Q_n^W$$

$$st \quad R_k - R_{k-1} - \sum_{m \in S_k} Q_m^S + \sum_{n \in W_k} Q_n^W = \sum_{i \in H_k} Q_{ik}^H - \sum_{j \in C_k} Q_{jk}^C$$

$$R_k \geq 0, Q_m^S \geq 0, Q_n^W \geq 0$$

$$R_1 = R_K = 0$$

Example: 2 hot/2 cold

	Fcp (MW/C)	*Tin(C)*	*Tout(C)*
H1	1	400	120
H2	2	340	120
C1	1.5	160	400
C2	1.3	100	250

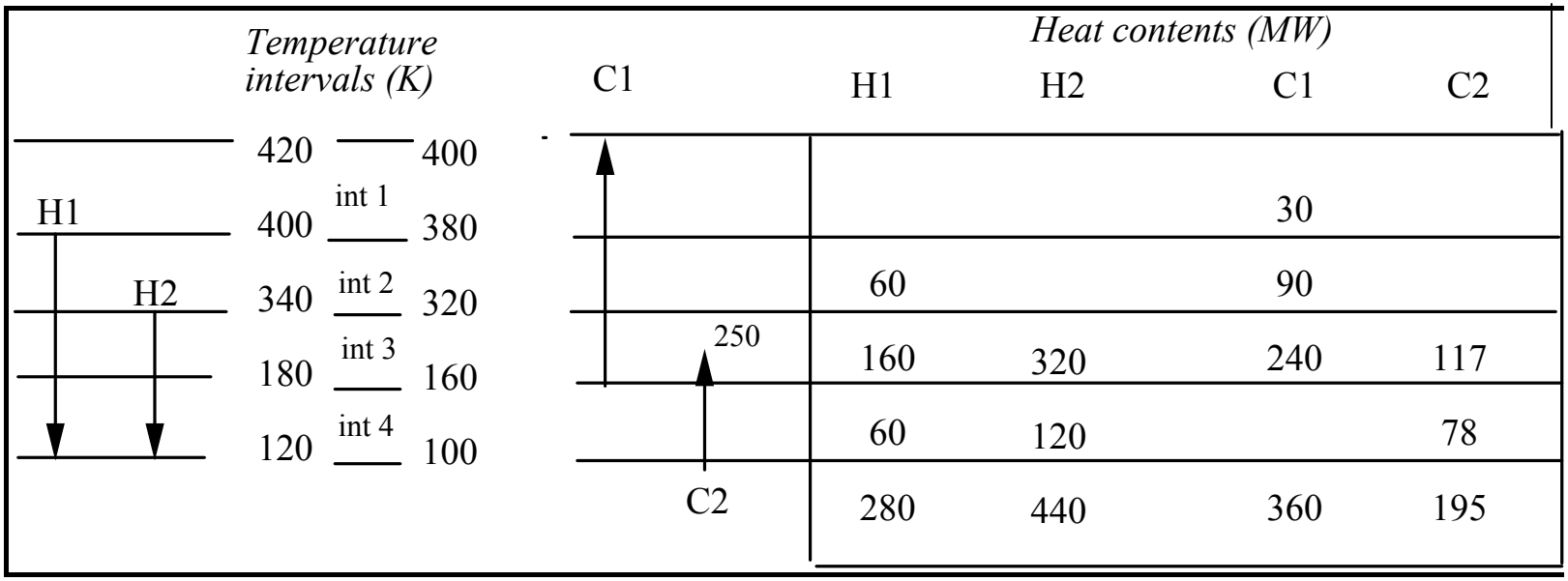

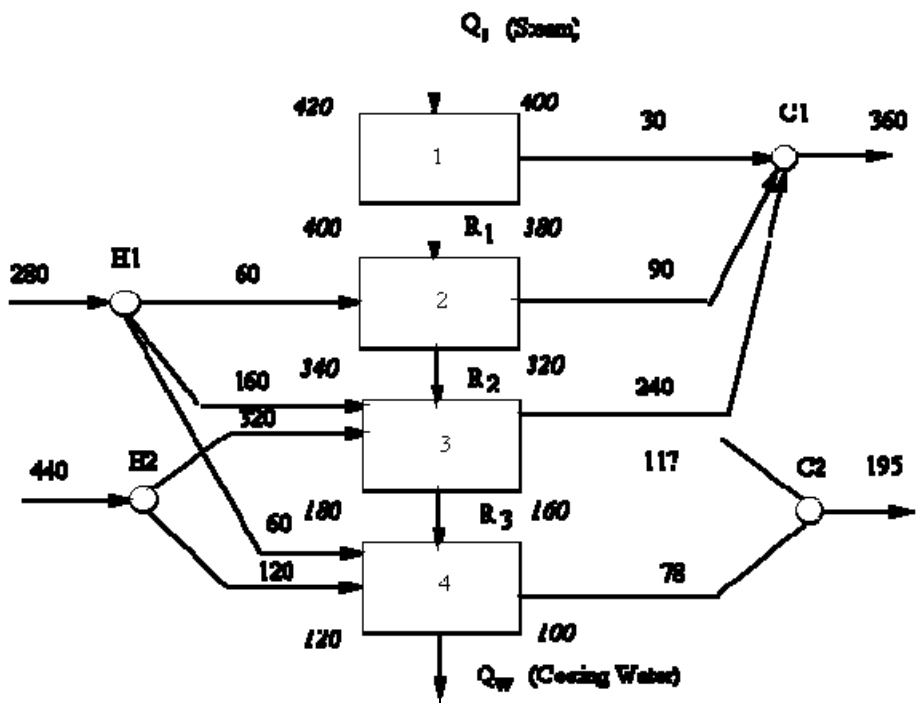

LP Transshipment:

$$\min Z = Q_S + Q_W$$

s.t.

$$R_1 - Q_S = -30$$

$$R_2 - R_1 = -30$$

$$R_3 - R_2 = 123$$

$$Q_W - R_3 = 102$$

$$Q_S, Q_W, R_1, R_2, R_3 \geq 0$$

Qs = 60 MW, Qw = 225 MW,
R1 = 30 MW, R2 = 0, R3 = 123 MW
R2 = 0 => pinch point at 340-320C

Synthesis of Heat Exchanger Networks

Yee and Grossmann (1990)

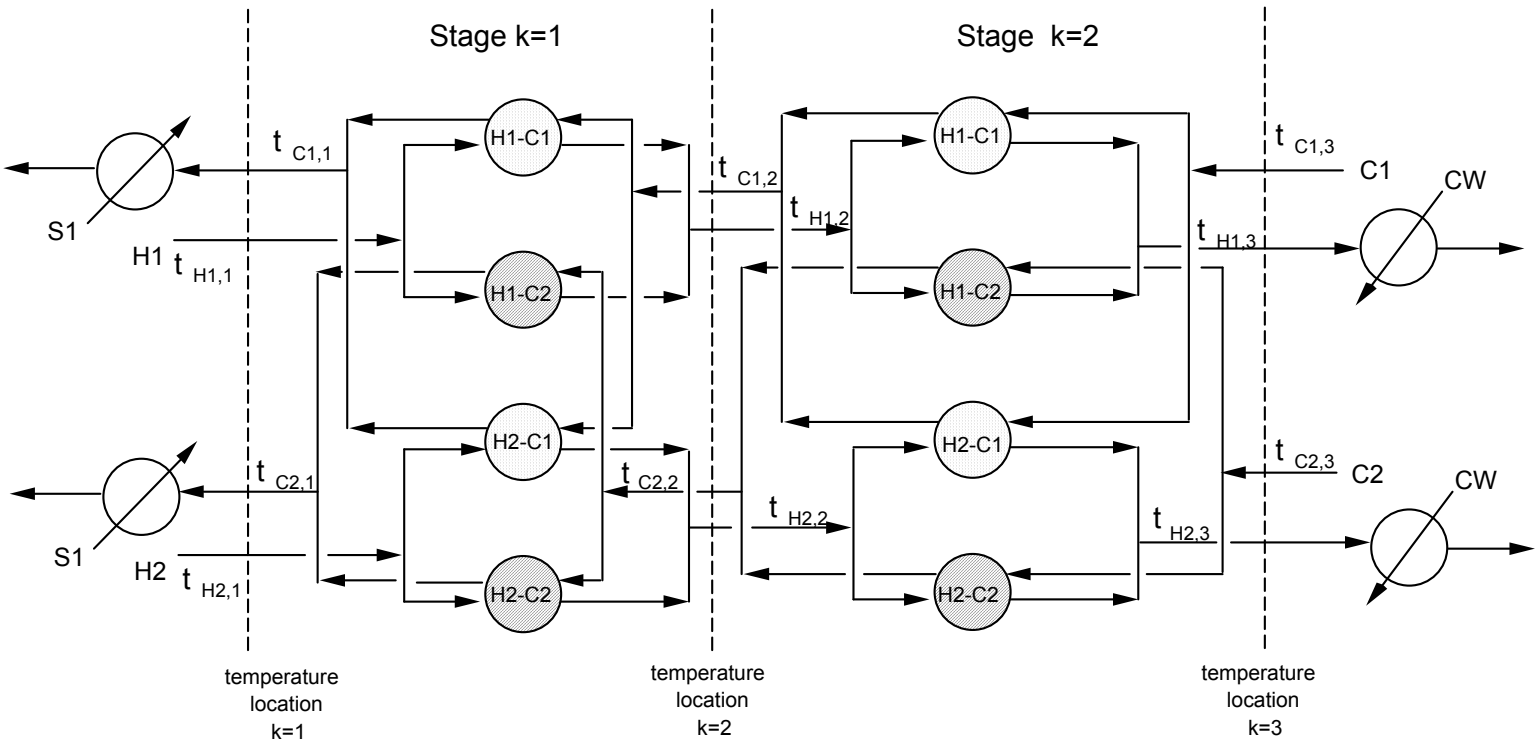

Multiple stages with potential heat exchangers $z_{ijk} = 0,1$

MINLP Model for Superstructure Optimization of Heat Exchanger Network Synthesis Yee and Grossmann (1990)

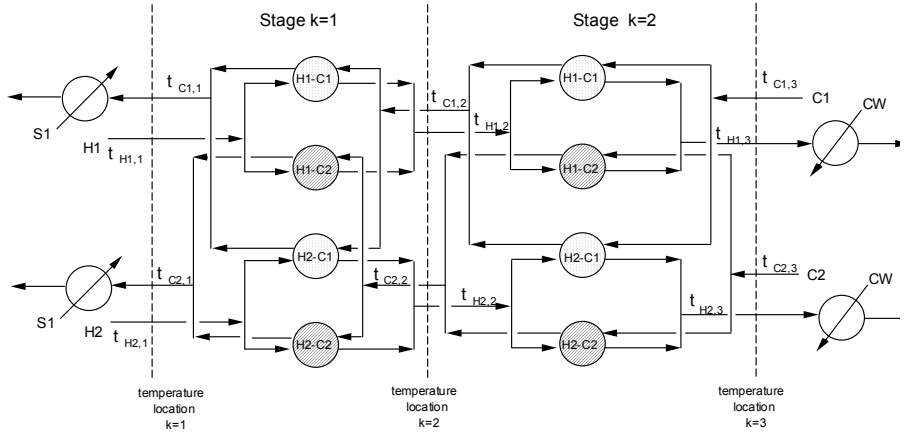

Two-stage superstructure

Parameters

TIN = inlet temperature of stream
TOUT = outlet temperature of stream
F = heat capacity flow rate
U = overall heat transfer coefficient
CCU = unit cost for cold utility
CHU = unit cost of hot utility
CF = fixed charge for exchangers
C = area cost coefficient
B = exponent for area cost
NOK = total number of stages
Ω = upper bound for heat exchange
Γ = upper bound for temperature difference

Variables

dt_{ijk} = temperature approach for match (i,j) at temperature location k
$dtcu_i$ = temperature approach for the match of hot stream i and cold utility
$dthu_j$ = temperature approach for the match of cold stream j and hot utility
q_{ijk} = heat exchanged between hot process stream i and cold process stream j in stage k
qcu_i = heat exchanged between hot stream i and cold utility
qhu_j = heat exchanged between hot utility and cold stream j
$t_{i,k}$ = temperature of hot stream i at hot end of stage k
$t_{j,k}$ = temperature of cold stream j at hot end of stage k
z_{ijk} = binary variable to denote existence of match (i,j) in stage k
zcu_i = binary variable to denote that cold utility exchanges heat with stream i
zhu_j = binary variable to denote that hot utility exchanges heat with stream j

Assumption

Isothermal mixing => linear constraints

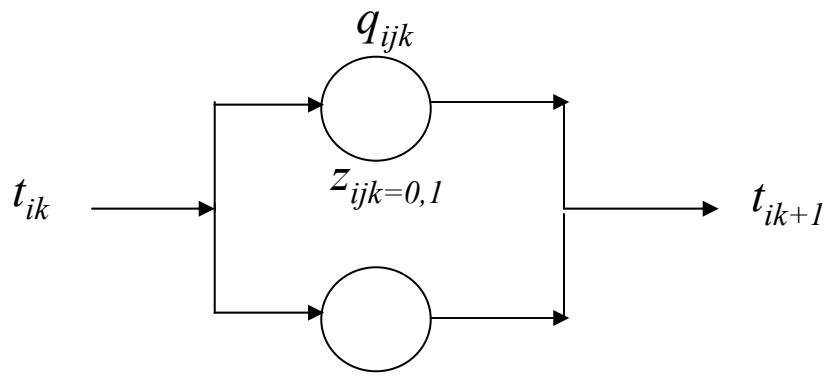

Rigorous if no stream splits

Procedure

1. **Solve MINLP assuming isothermal mixing**
2. **If splitting streams, solve NLP on reduced final configuration**

No. stages: max {no. hot, no. cold}

Overall heat balance for each stream

$$(TOUT_j - TIN_j)\, F_j = \sum_{k \in ST} \sum_{i \in HP} q_{ijk} + qhu_j \quad j \in CP$$

$$(TIN_i - TOUT_i)\, F_i = \sum_{k \in ST} \sum_{j \in CP} q_{ijk} + qcu_i \quad i \in HP$$

Heat balance at each stage

$$(t_{i,k} - t_{i,k+1})\, F_i = \sum_{j \in CP} q_{ijk} \quad i \in HP, k \in ST$$

$$(t_{j,k} - t_{j,k+1})\, F_j = \sum_{j \in HP} q_{ijk} \quad j \in CP, k \in ST$$

Feasibility of temperatures

$t_{i,k} \geq t_{i,k}+1$ $\quad k \in ST,\ i \in HP$

$t_{j,k} \geq t_{ji,k}+1$ $\quad k \in ST,\ j \in CP$

$TOUTi \geq ti_{,NOK+1}$ $\quad i \in HP$

$TOUTj \geq t_{j,1}$ $\quad j \in CP$

Hot and cold utility load

$(ti_{,NOK+1} - TOUT_i)\, F_i = qcu_i \quad i \in HP$

$(TOUTj - t_{j,1})\, Fj = qhu_j \quad j \in CP$

Logical constraints

$$q_{ijk} - \Omega z_{ijk} \le 0 \quad i \in HP, j \in CP, \; k \in ST$$
$$qcu_i - \Omega zcu_i \le 0 \quad i \in HP$$
$$qhu_j - \Omega zhu_j \le 0 \quad j \in CP$$
$$z_{ijk}, zcu_i, zhuj = 0,1$$

Calculation of approach temperatures

$$dt_{ijk} \le t_{i,k} - t_{j,k} + \Gamma(1 - z_{ijk}) \quad k \in ST, i \in HP, j \in CP$$
$$dt_{ijk}+1 \le t_{i,k+1} - t_{j,k+1} + \Gamma(1 - z_{ijk}) \quad k \in ST, i \in HP, j \in CP$$
$$dtcu_i \le t_{i,NOK+1} - TOUTCU + \Gamma(1 - zcu_i) \quad i \in HP$$
$$dthu_i \le TOUTHU - t_{j,1} + \Gamma(1 - zhu_j) \quad j \in CP$$
$$dt_{ijk} \ge EMAT$$

Objective function

Chen approximation (1987)

*LMTD ~ [(dtl*dt2)*(dtl+dt2)/2]1/3*

$$\min \; Z = \sum_{i \in HP} CCUqcu_i + \sum_{j \in CP} CHUqhu_j + \sum_{i \in HP} \sum_{j \in CP} \sum_{k \in ST} CF_{ij} z_{ijk} + \sum_{i \in HP} CF_{i,CU} zcu_i + \sum_{j \in CP} CF_{i,HU} zhu_j + \sum_{i \in HP} \sum_{j \in CP} \sum_{k \in ST} \frac{C_{ij} q_{ijk}}{U_{ijk}[(dt_{ijk})(dt_{ijk+1})(dt_{ijk} + dt_{ijk+1})/2)]^{1/3}} + \ldots etc.$$

SYNHEAT: http://newton.cheme.cmu.edu/interfaces

```
*PROCESS STREAMS
*

*HOT:
TIIN.FX('1') = 480.00;
TIOUT.FX('1') = 340.00;
FCI('1') = 1.50;
CFI('1') = 1.00;

TIIN.FX('2') = 420.00;
TIOUT.FX('2') = 330.00;
FCI('2') = 2.00;
CFI('2') = 1.00;

*COLD:
TJIN.FX('1') = 320.00;
TJOUT.FX('1') = 410.00;
FCJ('1') = 1.00;
CFJ('1') = 1.00;

TJIN.FX('2') = 350.00;
TJOUT.FX('2') = 460.00;
FCJ('2') = 2.00;
CFJ('2') = 1.00;

TMAPP = 10.00;
```

```
*UTILITIES
*
CFHU = 1.00;
THUIN = 500.00;
THUOUT = 500.00;
CFCU = 1.00;
TCUIN = 300.00;
TCUOUT = 300.00;

*
*COSTS
*
*UTILITIES
HUCOST = 80.00;
CUCOST = 20.00;

UNITC = 1000.00;
ACOEFF = 20.00;
HUCOEFF = 20.00;
CUCOEFF = 20.00;
```

Total Network Cost ($/yr) = 8962.60

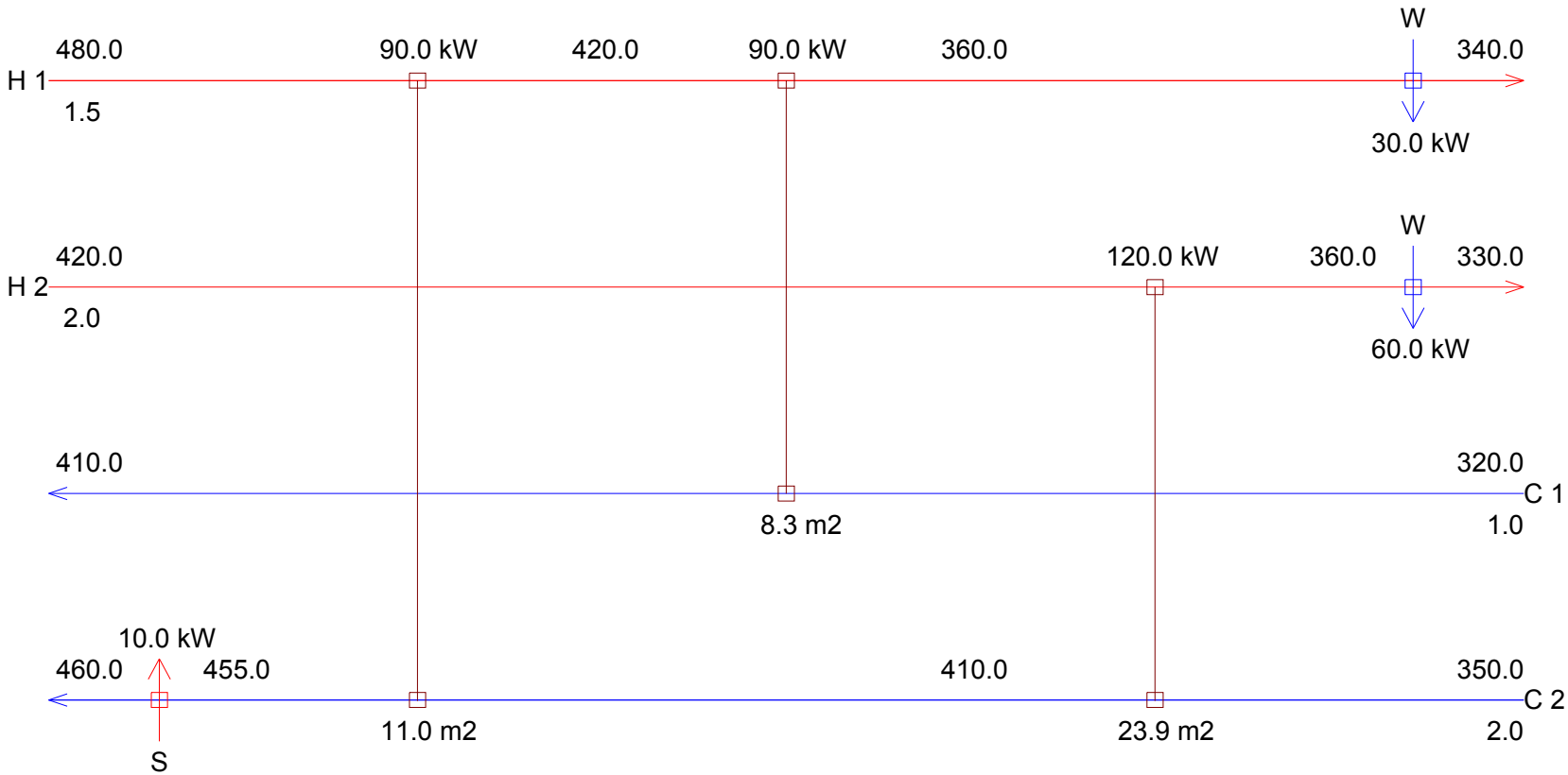

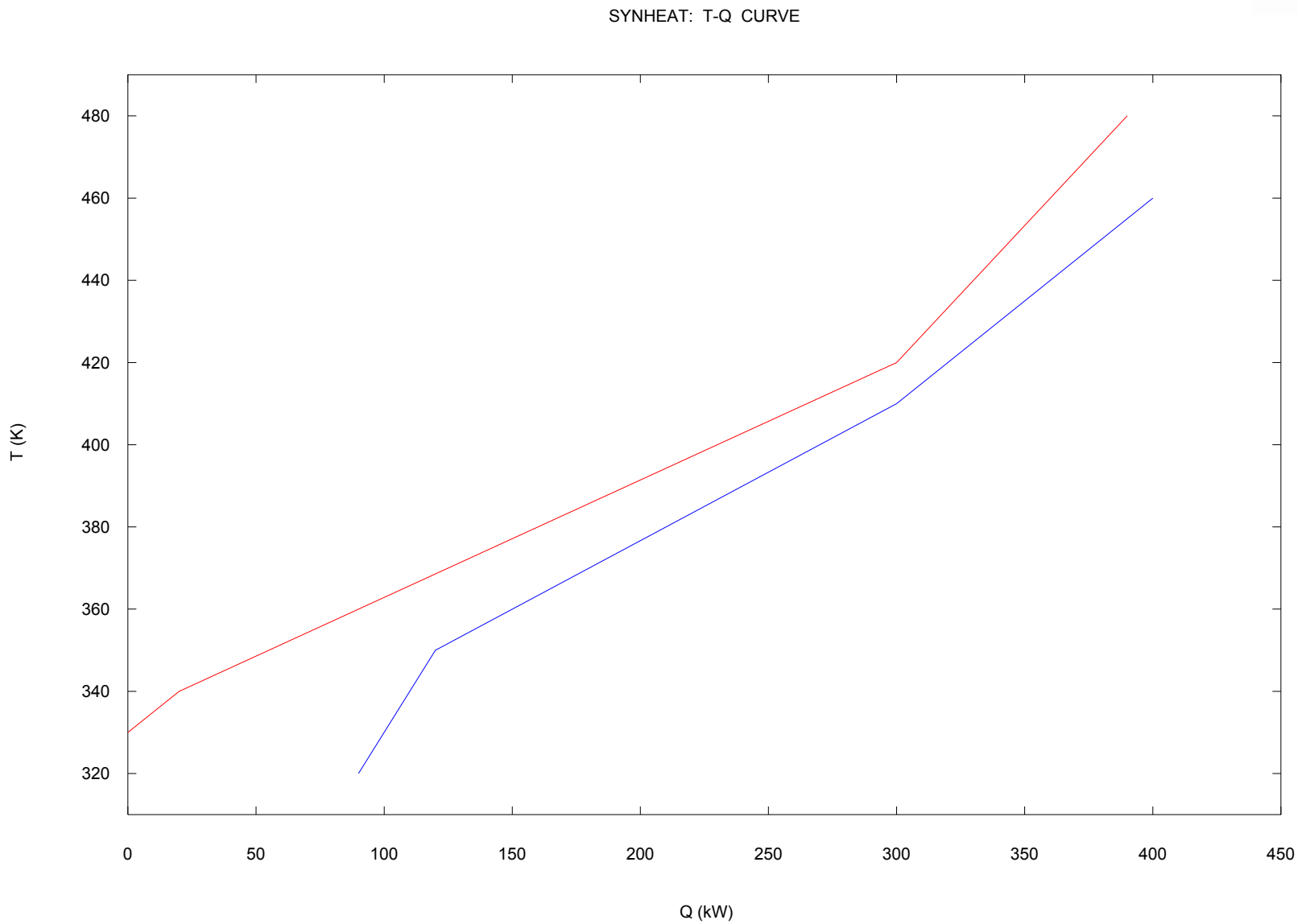
SYNHEAT: T-Q CURVE
T (K)
480
460
440
420
400
380
360
340
320
0
50
100
150
200
250
300
350
400
450
Q (kW)

Extension to isothermal streams in the MINLP Model

Ponce-Ortega, J.M., A. Jiménez and I.E. Grossmann (2008)

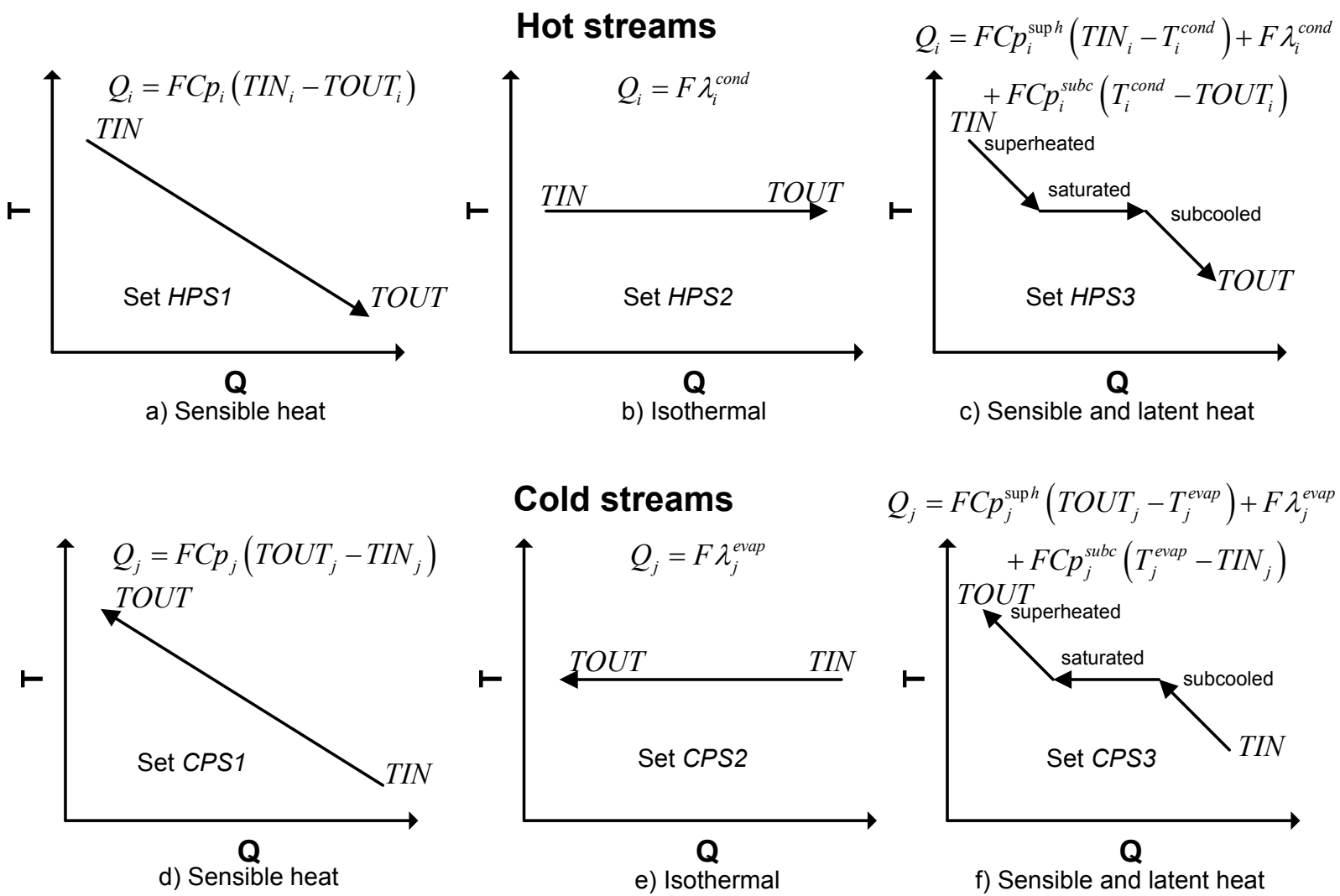

Different cases modeled with disjunctions

Example of disjunctive constraint

•Feasibility of Latent Heat Exchange

Outlet temperature for hot stream

$$\begin{pmatrix} Y_{i,k}^{1} \\ t_{i,k+1} \geq T_i^{cond} + \delta \\ q_{i,k}^{\Lambda} = 0 \end{pmatrix} \vee \begin{pmatrix} \neg Y_{i,k}^{1} \\ t_{i,k+1} \leq T_i^{cond} \\ q_{i,k}^{\Lambda} \geq 0 \end{pmatrix}$$

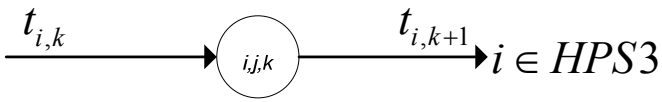

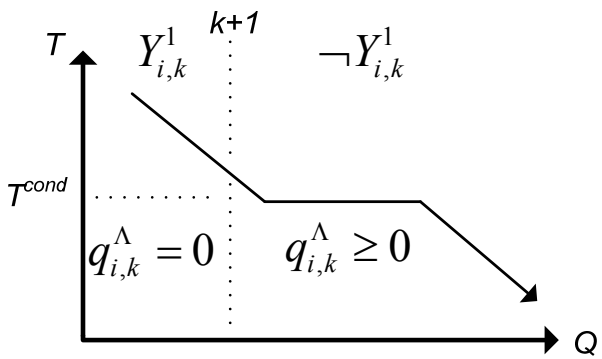

Superstructure for Utility Plants

Ref: Bruno et al. (1998)

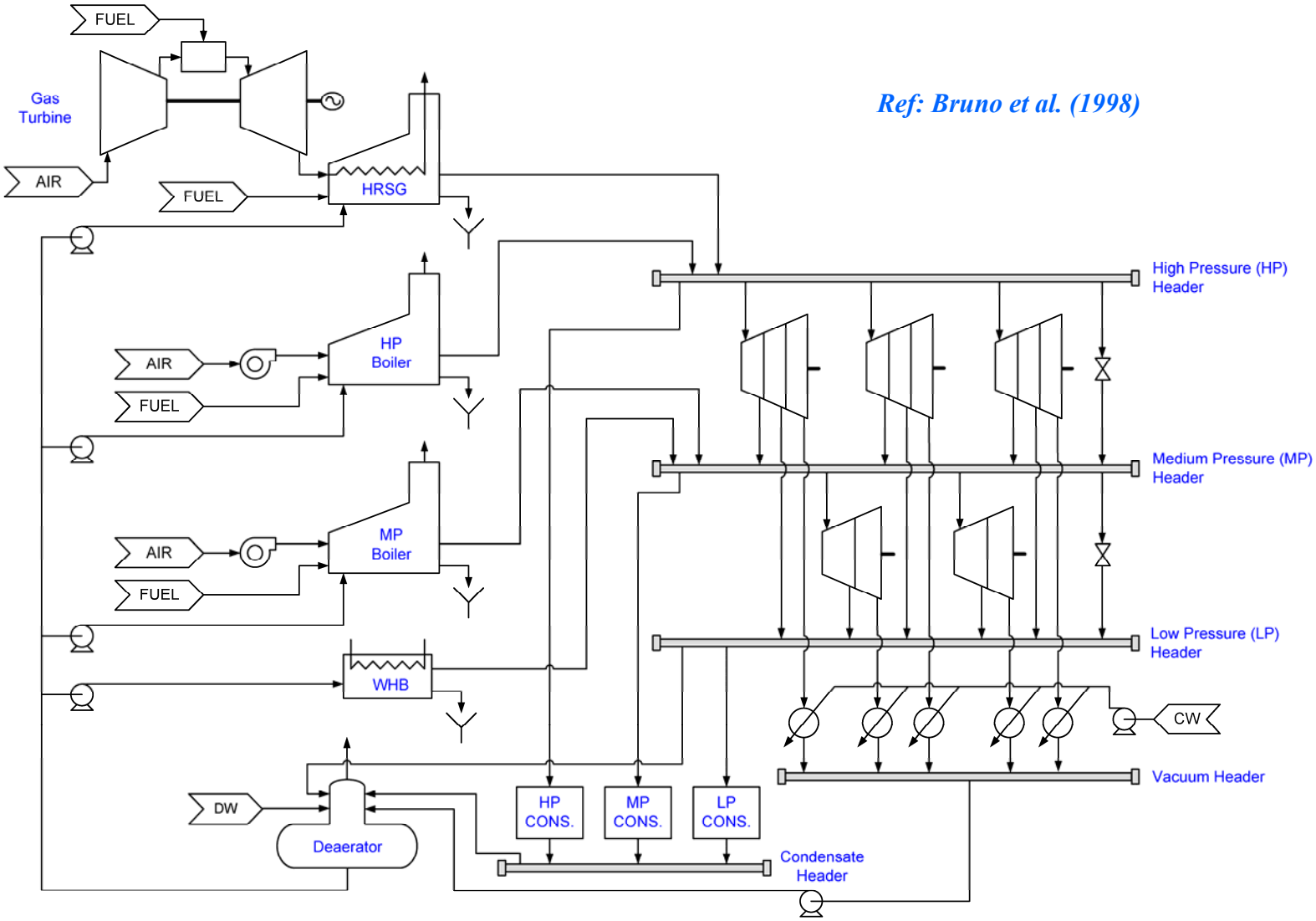

MINLP Model for Utility section

Min **Material costs (syngas, cooling water, demineralized water; IGCC)**
(energy requirement like heating and electricity are met internally)

s. t.

Rigorous material and energy balances

Rating / Performance equations for equipments

Logic constraints

- Electricity demand met by gas turbine, HP steam turbine or both
- Mechanical demands met either by electricity or by coupling with turbine shaft
  - If mechanical demand is met by turbine, exactly one turbine can be used.
- Each turbine can contribute exactly one demand

STEAM: http://newton.cheme.cmu.edu/interfaces

Numerical Example for Utility Model

Demands

Electricity: 500 MW
Mechanical Power No 1: 5 MW
Mechanical Power No 2: 15 MW
HP Heating: 5 MW
MP Heating: 20 MW
LP Heating: 50 MW

Non-convex MINLP problem

Binary variables: 44
Continuous variables: 1275
Constraints: 1309

Modeled and solved using GAMS/DICOPT
(Intel Core 2 Duo 2.4 GHz with 2 GB RAM)

Pressure of Steam Headers

HP: 45 bar
MP: 20 bar
LP: 7 bar

Superstructure

62 process streams
3 HP turbines (7 modes)
2 MP turbines (3 modes)
5 Headers (HP, MP, LP, Cond, Vac)
1 Gas turbine (compressor, expander)
3 Boilers (HP, MP, HRSG)
4 Combustors (GT, Boilers)
5 Liquid pumps
2 Air blowers
1 Deaerator

Optimal Solution for Numerical Example

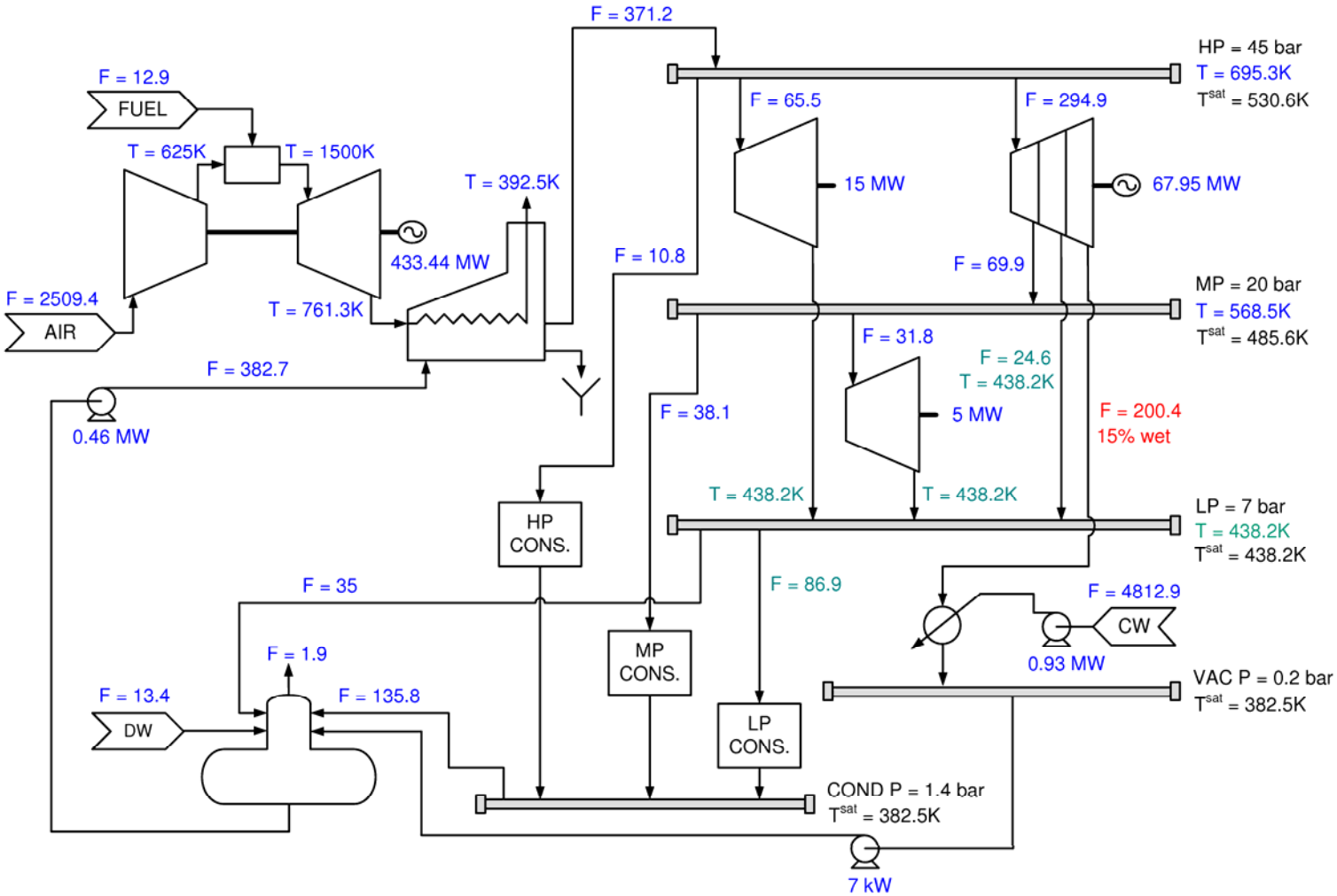

Operating cost = $307.27 Million/yr

Carnegie Mellon

Conventional System

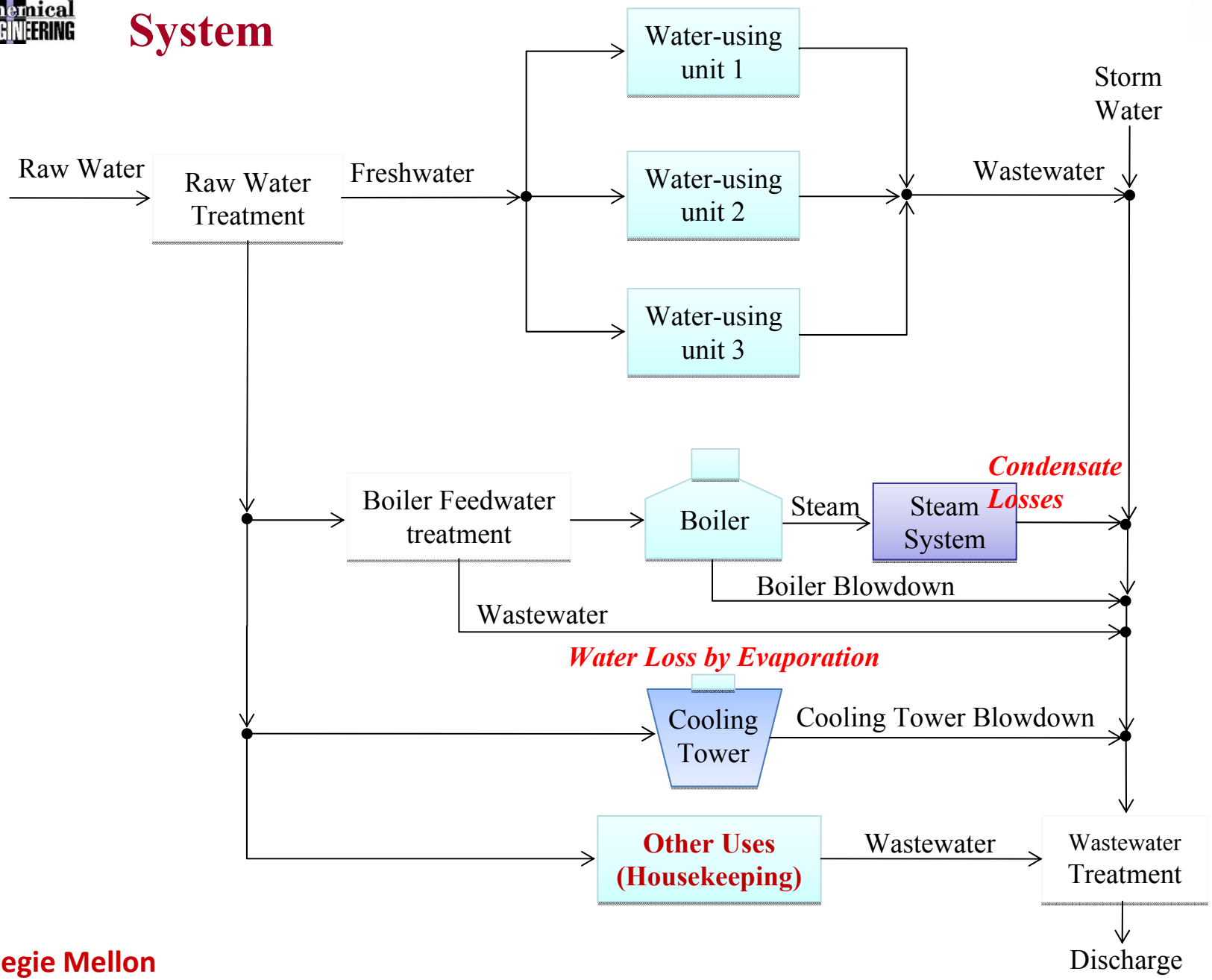

Synthesis of Integrated Process Water Networks

- **Given is:**
  - a set of <u>single/multiple water sources</u> with/without contaminants,
  - a set of <u>water-using, water pre-treatment, and wastewater treatment operations, sinks and sources of water</u>

- **Synthesize** an <u>integrated process water network</u>
  - interconnection of process and treatment units (reuse, recycle)
  - the flow rates and contaminants concentration of each stream
  - minimum total annual cost of water network

Synthesis Integrated Process Water Networks

- Pinch analysis and mathematical programming models
- *Reviews in Bagajewicz (2000), Ježowski (2008), Bagajewicz and Faria (2009), and Foo (2009).*

Approach: Global NLP or MINLP superstructure optimization model

Superstructure for water networks for water reuse, recycle, treatment, and with sinks/sources water

Ahmetovic, Grossmann (2010)

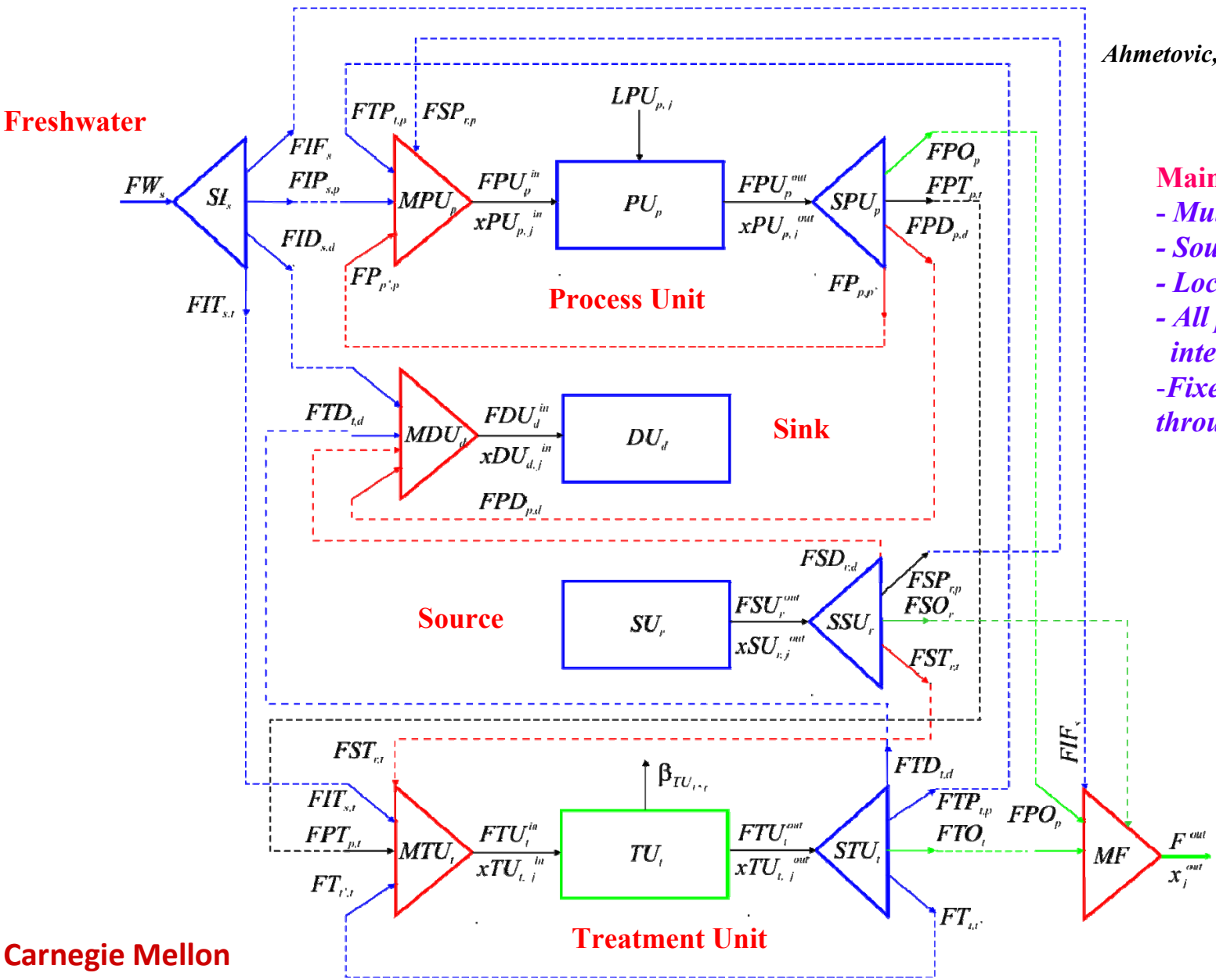

Main features:

- *Multiple feeds*
- *Source/Sink units*
- *Local recycles*
- *All possible interconnections*
- *Fixed and variable flows through process units*

Note on Treatment Units

Galan, Grossmann (2011)

Industrial wastewater requires complex treatment networks

Sequential treatment has been chosen with 2-4 Best Available Technologies for the removal of each type of pollutant

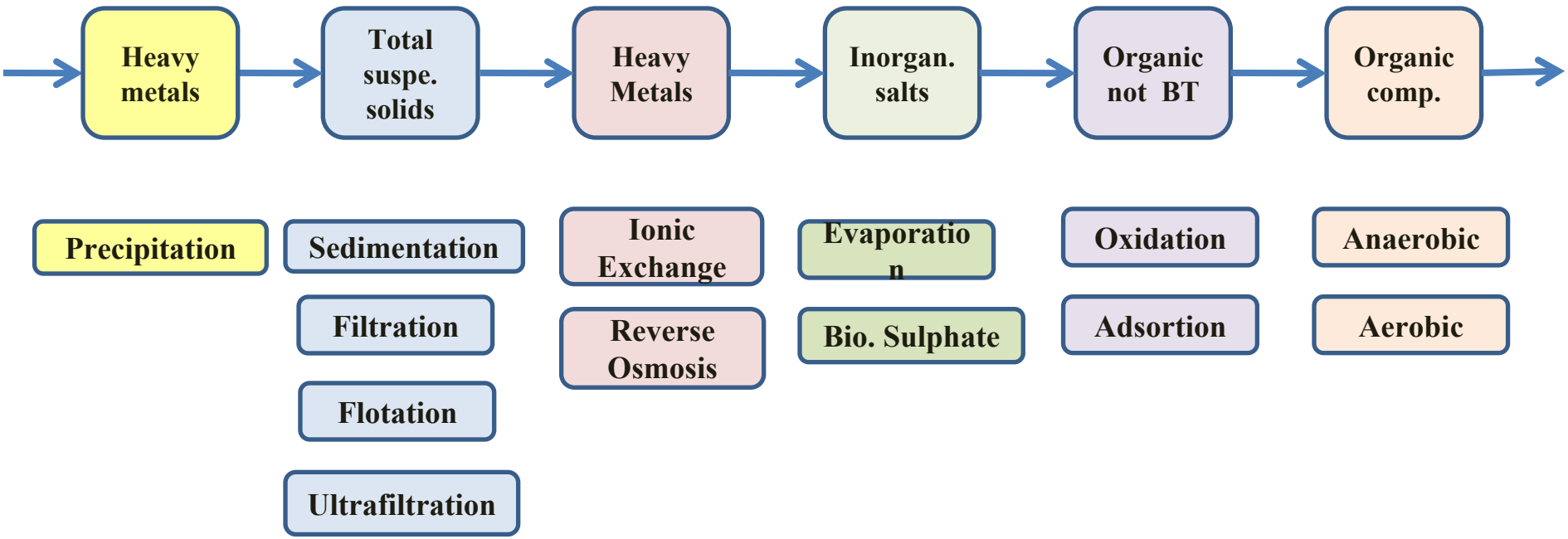

Superstructure for industrial wastewater treatment

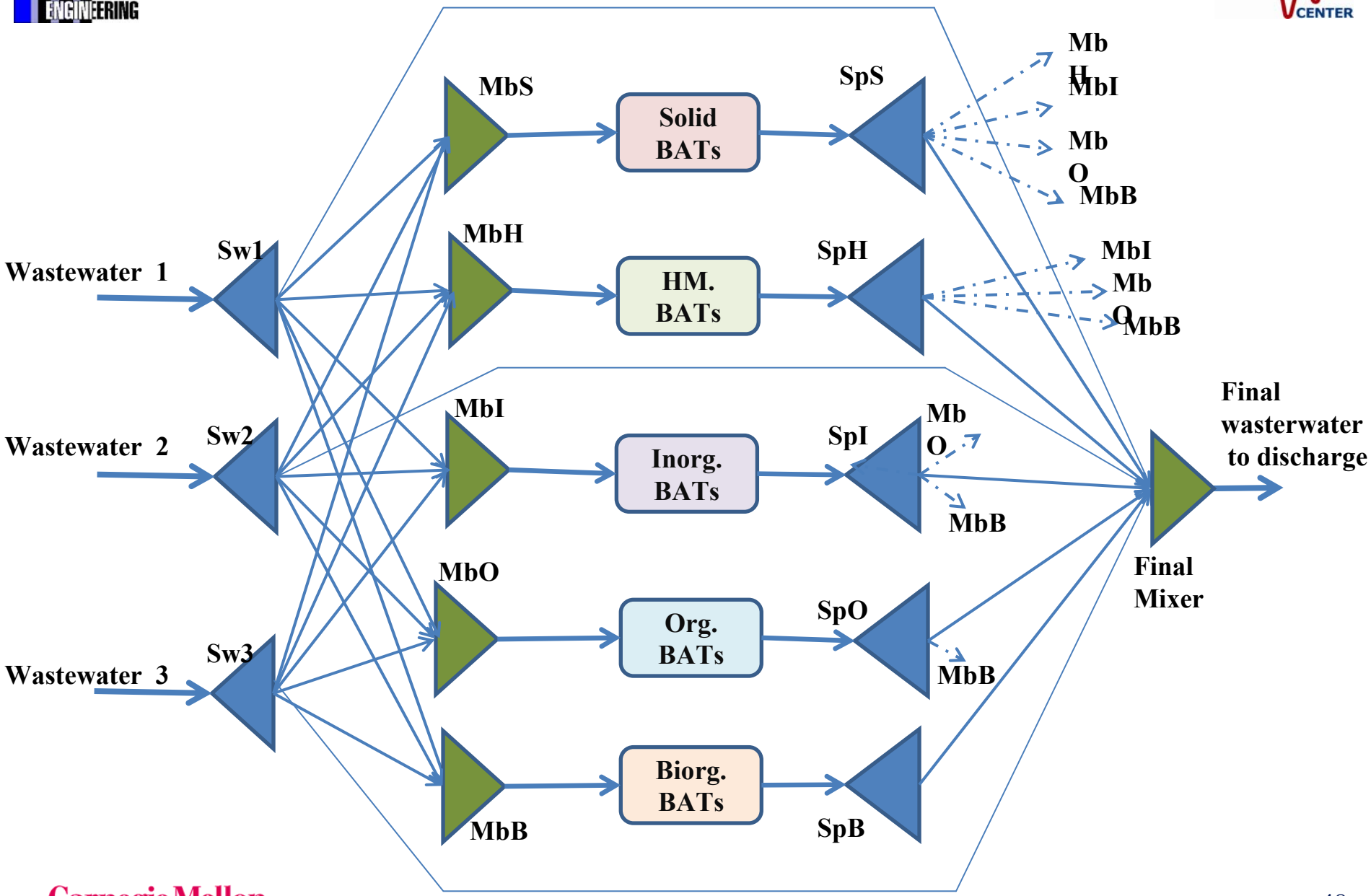

Optimization Model

Nonconvex NLP or MINLP

Objective function: ***min Cost***

Subject to:

Splitter mass balances
Mixer mass balances (bilinear)
Process units mass balances
Treatment units mass balances
Design constraints

0-1 variables for piping sections

Model can be solved to global optimality

Splitter

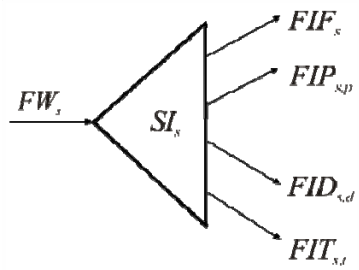

$$FW_s = FIF_s + \sum_{p \in PU} FIP_{s,p} + \sum_{d \in DU} FID_{s,d} + \sum_{t \in TU} FIT_{s,t} \qquad \forall s \in SW$$

linear

$$FIF_s^L \cdot y_{FIF_s} \le FIF_s \le FIF_s^U \cdot y_{FIF_s} \qquad \forall s \in SW$$

$$FIP_{s,p}^L \cdot y_{FIP_{s,p}} \le FIP_{s,p} \le FIP_{s,p}^U \cdot y_{FIP_{s,p}} \qquad \forall s \in SW, \forall p \in PU$$

$$FID_{s,d}^L \cdot y_{FID_{s,d}} \le FID_{s,d} \le FID_{s,d}^U \cdot y_{FID_{s,d}} \qquad \forall s \in SW, \forall d \in DU$$

$$FIT_{s,t}^L \cdot y_{FIT_{s,t}} \le FIT_{s,t} \le FIT_{s,t}^U \cdot y_{FIT_{s,t}} \qquad \forall s \in SW, \forall t \in TU$$

0-1 optional

Mixer

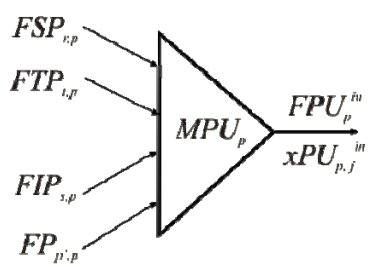

$$FPU_p^{in} = \sum_{r \in SU} FSP_{r,p} + \sum_{t \in TU} FTP_{t,p} + \sum_{s \in SW} FIP_{s,p} + \sum_{\substack{p' \in PU \\ p \ne p', R_p = 0}} FP_{p',p} + \sum_{\substack{p' \in PU \\ R_p = 1}} FP_{p',p}, \qquad \forall p \in PU$$

Process unit

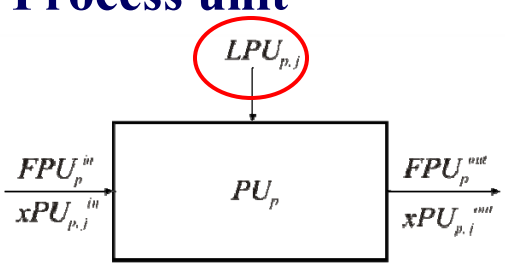

$$FPU_p^{in} = FPU_p^{out} \qquad \forall p \in PU$$

linear if flowrate is fixed

$$FPU_p^{in} \cdot xPU_{p,j}^{in} + LPU_{p,j} \cdot 10^3 = FPU_p^{out} \cdot xPU_{p,j}^{out} \qquad \forall p \in PU, \forall j$$

bilinear if the flow treated as cont. variable

Cost function linear in feedwater, concave in treatment unit, linear in operating cost, pipe section fixed charge (0-1)

$$\min Z = H \cdot \sum_{s \in SW} FW_s \cdot CFW_s + AR \cdot \sum_{t \in TU} IC_t \cdot \qquad - H \cdot \sum_{t \in TU} OC_t \cdot FTU_t^{out}$$

Controlling complexity network

Limit number of 0-1 vars to N_{max} number "removable" pipes

$$\sum_{s\in SW}\sum_{p\in PU} y_{FIP_{s,p}} + \sum_{s\in SW}\sum_{t\in TU} y_{FIT_{s,t}} + \sum_{s\in SW} y_{FIF_s} + \sum_{\substack{p'\in PU \\ p'\neq p, R_p=0}}\sum_{p\in PU} y_{FP_{p',p}} + \sum_{\substack{p'\in PU \\ R_{PU}=1}}\sum_{p\in PU} y_{FP_{p',p}} + \sum_{p\in PU} y_{FPO_p}$$

$$+ \sum_{p\in PU}\sum_{t\in TU} y_{FPT_{p,t}} + \sum_{\substack{t'\in TU \\ t'\neq t, R_t=0}}\sum_{t\in TU} y_{FT_{t',t}} + \sum_{\substack{t'\in TU \\ R_t=1}}\sum_{t\in TU} y_{FT_{t',t}} + \sum_{t\in TU} y_{FTO_t} + \sum_{t\in TU}\sum_{p\in PU} y_{FTP_{t,p}}$$

$$+ \sum_{s\in SW}\sum_{d\in DU} y_{FID_{s,d}} + \sum_{p\in PU}\sum_{d\in DU} y_{FPD_{p,d}} + \sum_{t\in TU}\sum_{d\in DU} y_{FTD_{t,d}} + \sum_{r\in SU}\sum_{d\in DU} y_{FSD_{r,d}} + \sum_{r\in SU} y_{FSO_r}$$

$$+ \sum_{r\in SU}\sum_{t\in TU} y_{FST_{r,t}} + \sum_{r\in SU}\sum_{p\in PU} y_{FSP_{r,p}} \leq N_{\max}$$

Can develop trade-off curve solving successive MINLPs

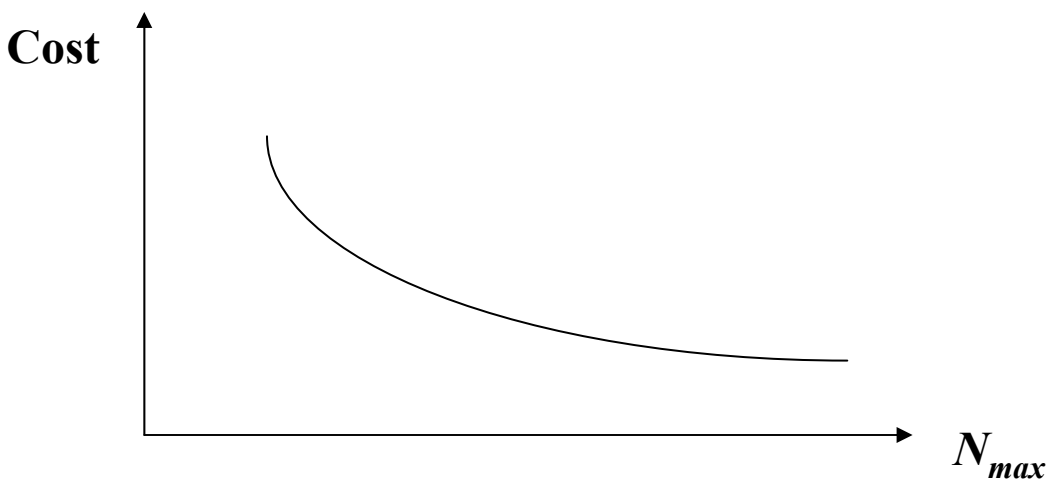

Convexification of Non-convex functions

Convex Envelopes for Bilinear Terms *F*C*

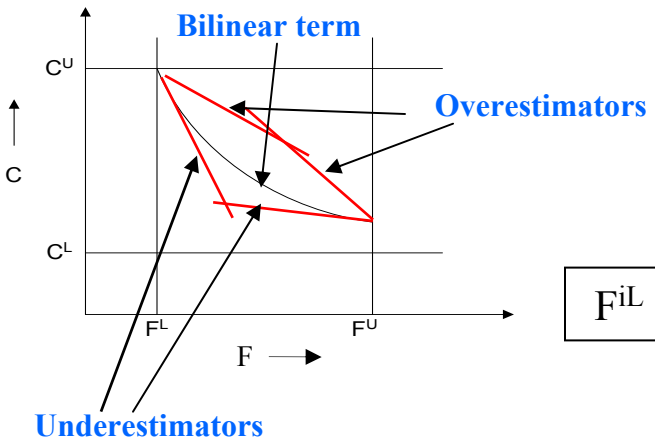

$$f_j^i \geq F^{iL} C_j^i + C_j^{iL} F^i - F^{iL} C_j^{iL}$$
$$f_j^i \geq F^{iU} C_j^i + C_j^{iU} F^i - F^{iU} C_j^{iU}$$
$$f_j^i \leq F^{iL} C_j^i + C_j^{iU} F^i - F^{iL} C_j^{iU}$$
$$f_j^i \leq F^{iU} C_j^i + C_j^{iL} F^i - F^{iU} C_j^{iL}$$

McCormick (1976)

Under- and over-estimators
(Linear Inequalities)

$$F^{iL} \leq F^i \leq F^{iU}$$

$$C_j^{iL} \leq C_j^i \leq C_j^{iU}$$

Underestimation of Concave functions

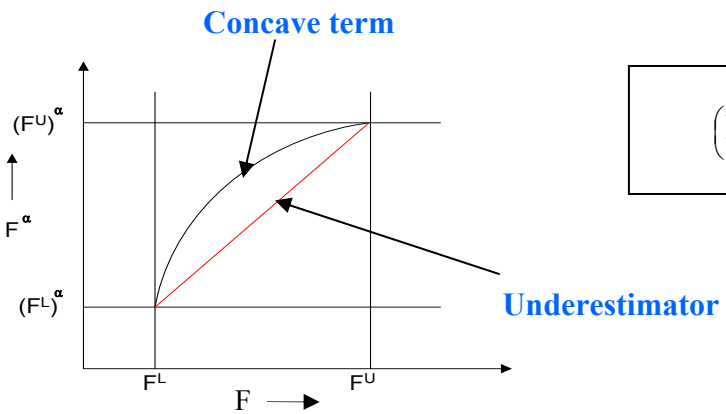

$$\left(\overline{F}^i\right) \geq \left(F^{iL}\right)^\alpha + \left(\frac{\left(F^{iU}\right)^\alpha - \left(F^{iL}\right)^\alpha}{F^{iU} - F^{iL}}\right) \times \left(F^i - F^{iL}\right)$$

(Secant line)

$$F^{iL} \leq F^i \leq F^{iU}$$

- The **cut proposed by Karuppiah and Grossmann (2006)** is incorporated to significantly improve the **strength of the lower bound** for the global optimum: ***contaminant flow balances for the overall water network system***

$$\sum_{s\in SW} FW_s \cdot xW_{s,j}^{in} + \sum_{p\in PU} LPU_{p,j} \cdot 10^3 + \sum_{r\in SU} FSU_r^{out} \cdot xSU_{r,j}^{out} = \sum_{t\in TU} (1-\beta_{TU_{t,j}}) \cdot FTU_t^{in} \cdot xTU_{t,j}^{in}$$
$$+ F^{out} \cdot x_j^{out} + \sum_{d\in DU} FDU_d^{in} \cdot xDU_{d,j}^{in} \qquad \forall j$$

bilinear terms for the treatment units and final mixing points

Cut is redundant for original problem
Non-redundant for relaxation problem

- **Tight bounds on the variables are expressed as general equations obtained by physical inspection of the superstructure and using logic specifications**

WATER: http://newton.cheme.cmu.edu/interfaces

Example 1

The objective of this example is to:

- solve NLP and MINLP water network problems
- compare results obtained with/without allowed recycle around process units
- illustrate how the complexity of the water networks can be controlled

Data of process units.

Unit	Flow rate (t/h)	Discharge load (kg/h)		Maximum inlet concentration (ppm)	
		A	B	A	B
PU1	40	1	1.5	0	0
PU2	50	1	1	50	50

Data of treatment units.

Unit	% Removal for contaminant		IC (Investment cost coefficient)	OC (Operating cost coefficient)	α
	A	B			
TU1	95	0	16800	1	0.7
TU2	0	95	12600	0.0067	0.7

Example 1

Superstructure of integrated water network with two process and two treatment units

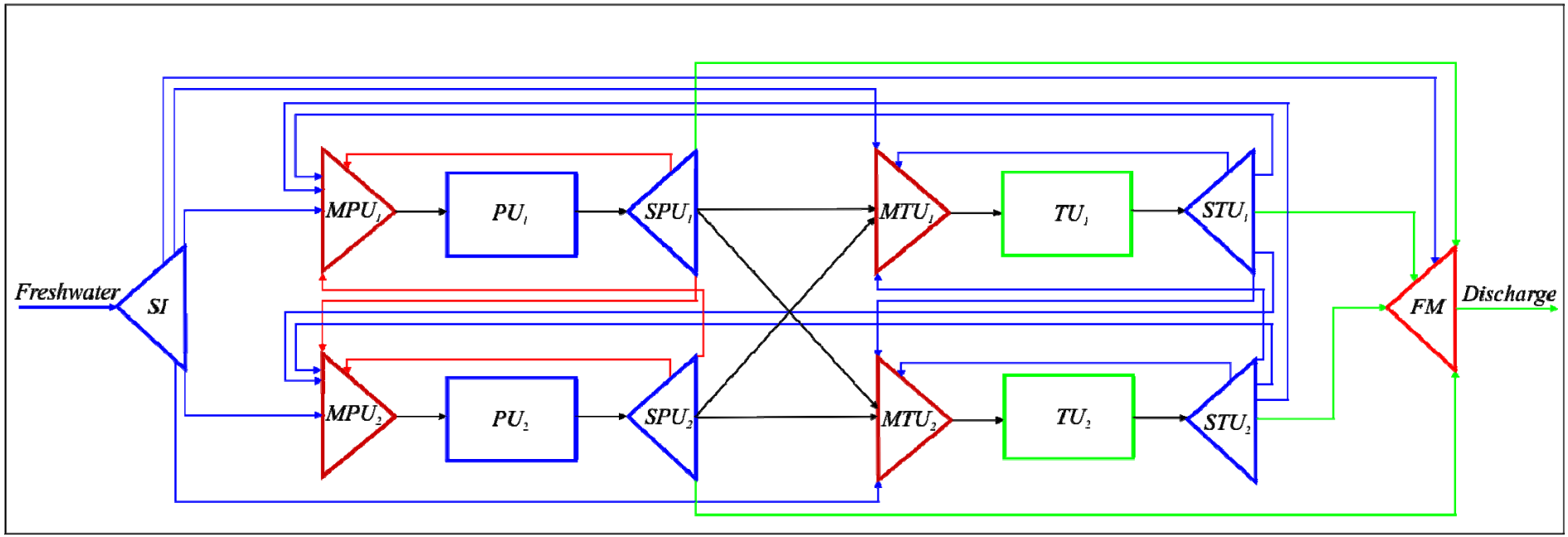

NLP and MINLP solved to global optimality with BARON
Selected optimality tolerance = 0.0

Model statistics and computational results for Example 1

Continuous variables	Discrete variables	Constraints	CPU time (s)
55	-	44	< 0.5
57*	**-**	**44**	**< 1.0**
75	20	85	< 3.6
79*	**22**	**89**	**< 2.5**
77**	**20**	**85**	**13.2**

***Option with local recycles. **Variable flowrates in process units.**

Example 1

Case 1 (NLP): Objective function: cost of water, investment cost on treatment units and operating cost for treatment units

	Without recycle	With recycle
Freshwater cost	$320000	$320000
Investment cost on treatment units	$37440	$33585.3
Operating costs for treatment units	$238723.6	$230431.6
Total cost	**$596163.6**	**$584016.9**

Case 2 (MINLP): Objective function: cost of water, investment cost on treatment units, operating cost for treatment units, investment cost on pipes, operating cost for pumping water through pipes

	Without recycle	With recycle
Freshwater cost	$320000	$320000
Investment cost on pipes	$540.69	$546.3
Operating cost for pumping water	$10056.26	$9427.84
Investment cost on treatment units	$37440.01	$33585.32
Operating costs for treatment units	$238723.59	$230431.64
Total cost	**$606760.55**	**$593991.1**

2% saving with recycle

8 “removable connections”

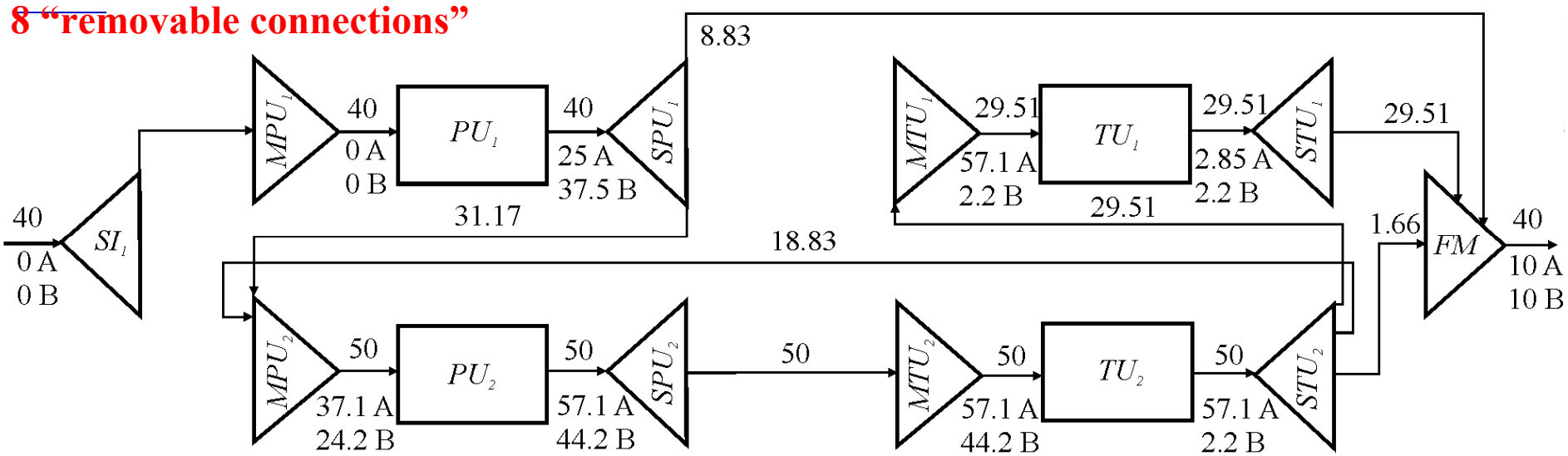

Optimal solution for the NLP and MINLP problem without local recycle

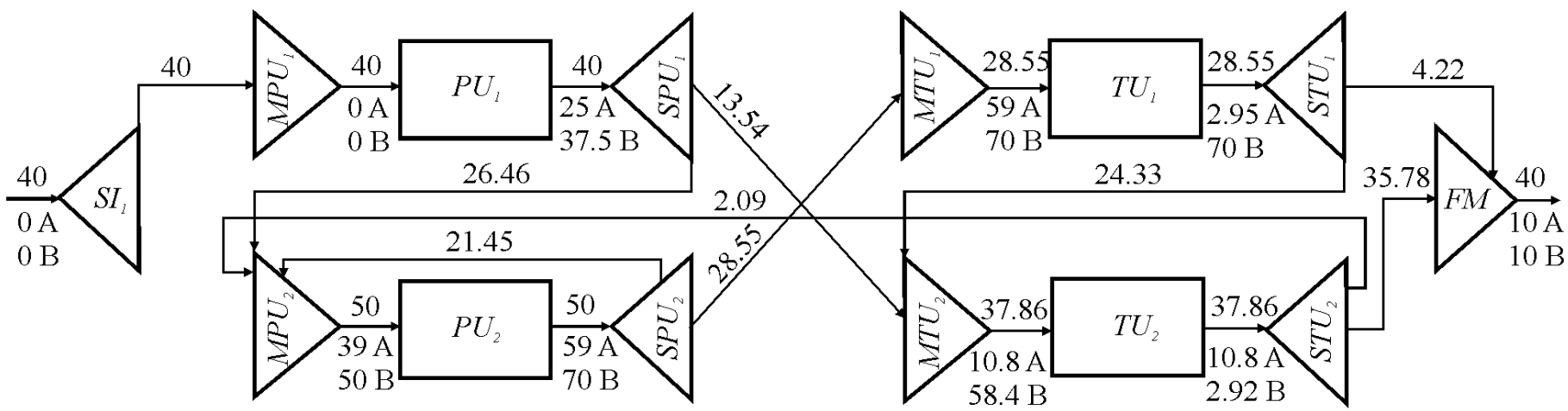

9 “removable connections”

Optimal solution for the NLP and MINLP problem with local recycle

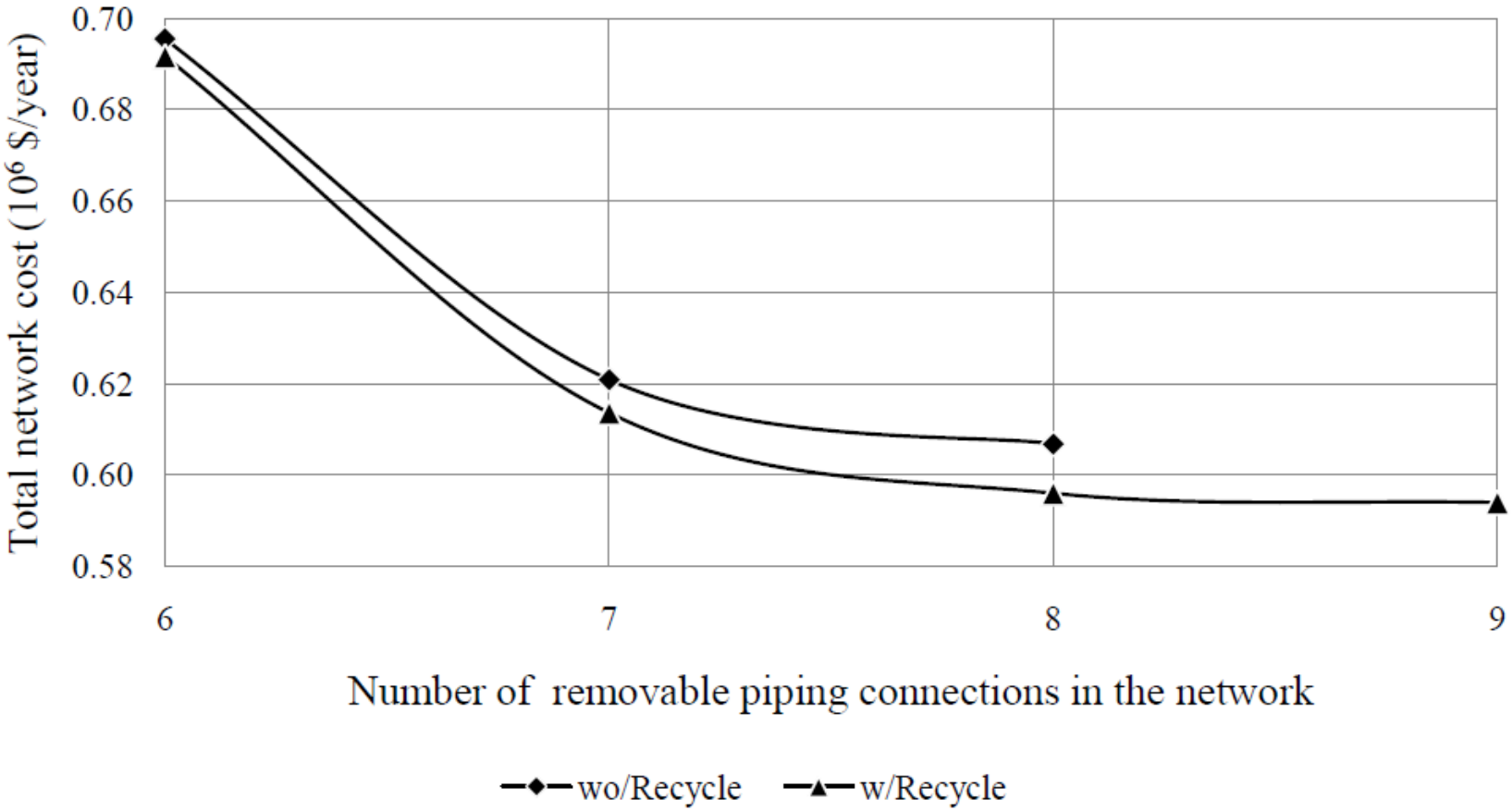

Pareto-optimal solutions for minimum cost and minimum number of removable connections

Example 2

Objective of this example: show that proposed model can be used to establish trade-off complexity vs cost of water network

Data for process units

Unit	Flow rate (t/h)	Discharge load (kg/h)			Maximum inlet concentration (ppm)		
		A	B	C	A	B	C
PU 1	40	1	1.5	1	0	0	0
PU 2	50	1	1	1	50	50	50
PU 3	60	1	1	1	50	50	50
PU 4	70	2	2	2	50	50	50
PU 5	80	1	1	0	25	25	25

Data for treatment units

Unit	Removal ratio (%)			IC (Investment cost coefficient)	OC (Operating cost coefficient)	α
	A	B	C			
TU 1	95	0	0	16800	1	0.7
TU 2	0	0	95	9500	0.04	0.7
TU 3	0	95	0	12600	0.0067	0.7

Superstructure of the integrated water network

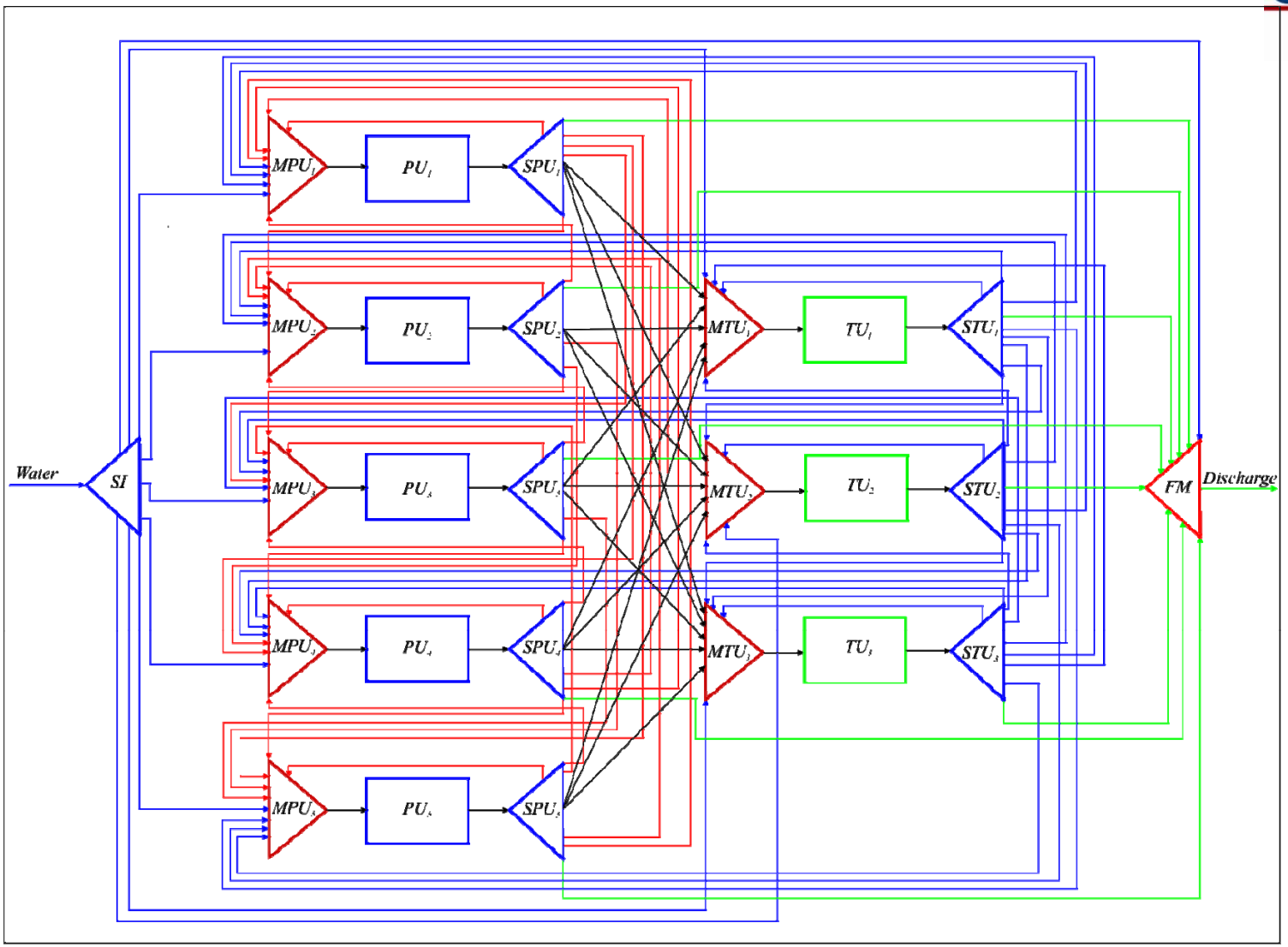

MINLP: 72 0-1 vars, 233 cont var, 251 constr
optcr=0.01 197.5 CPUsec

Example 2

Cost of water network for different number of removable piping connections

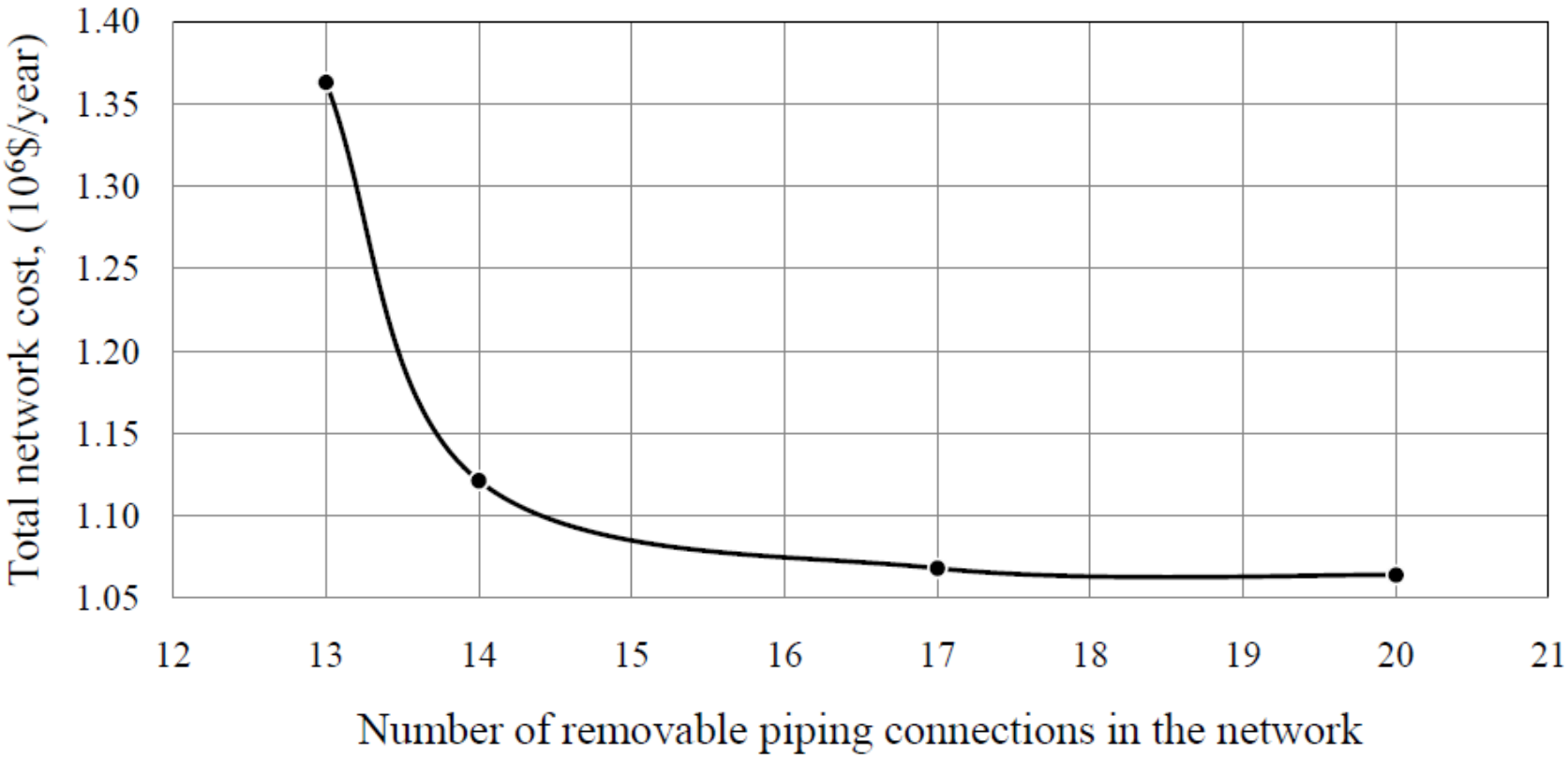

Note: reduction 7 pipe segments => 28 % increase in cost

Optimal design of the simplified water network with 13 removable connections

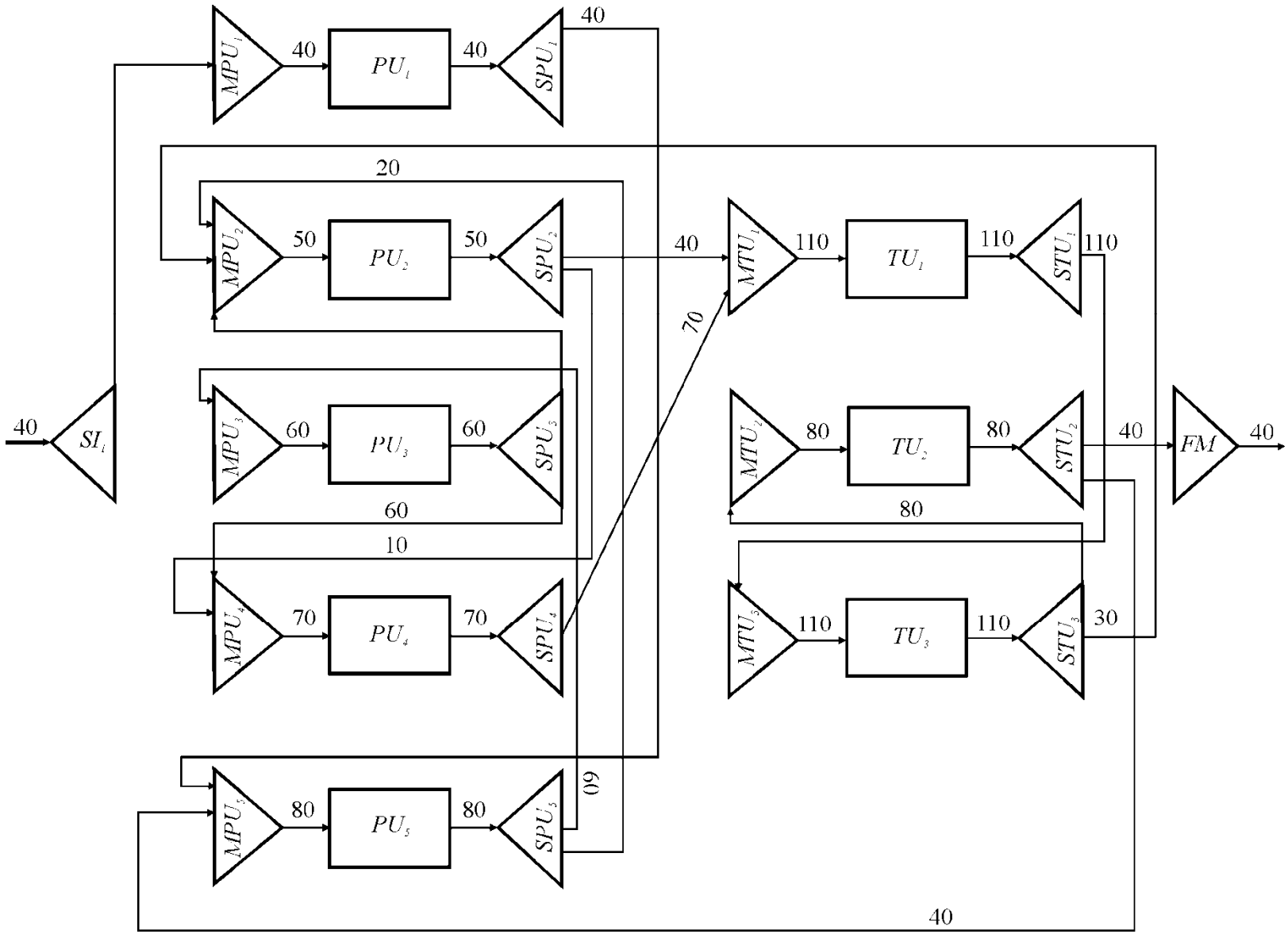

Large scale water network problem

4 feeds, 6 process units, 4 treatment units, 3 contaminants

Optimal Freshwater Consumption

40 t/h

vs

390 t/h

conventional

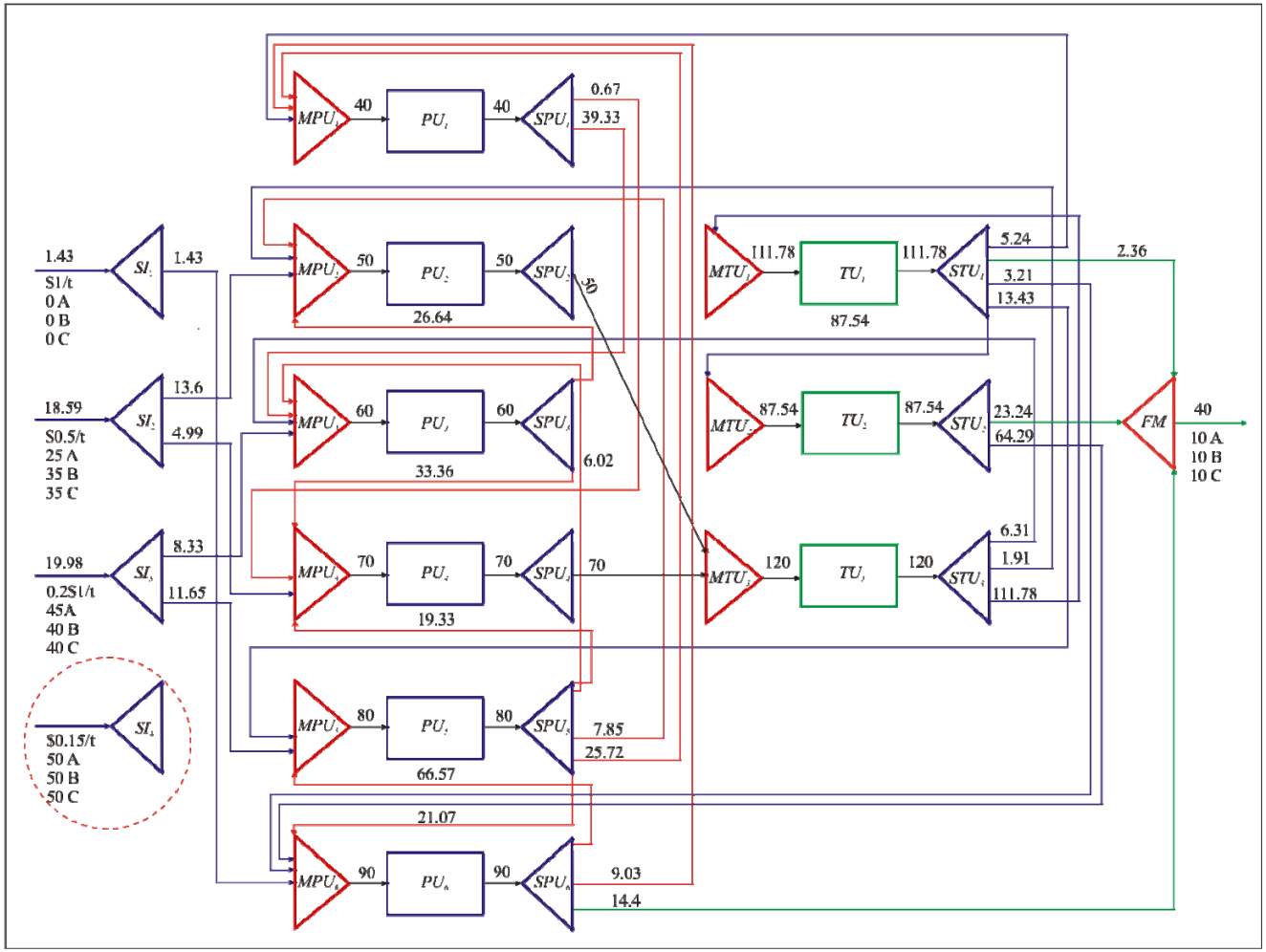

NLP: 232 variables, 121 constraints BARON: 2 secs

Simultaneous heat and water flowsheet optimization

Flowsheets with recycle

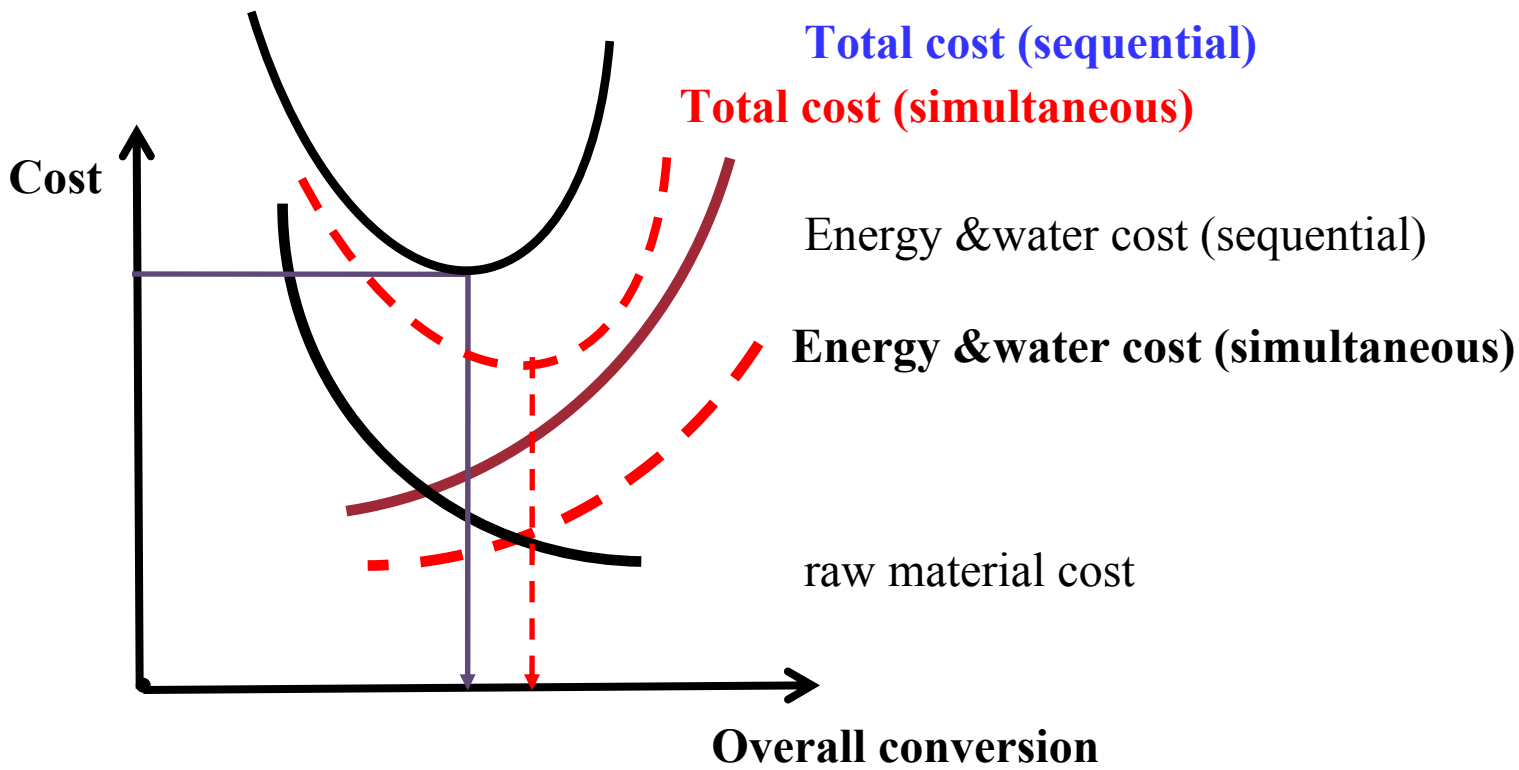

Advantage Simultaneous vs Sequential

Leads to total lower cost and higher overall conversion

Strategy for simultaneous optimization

Duran, Grossmann (1986) Yang, Grossmann (2011)

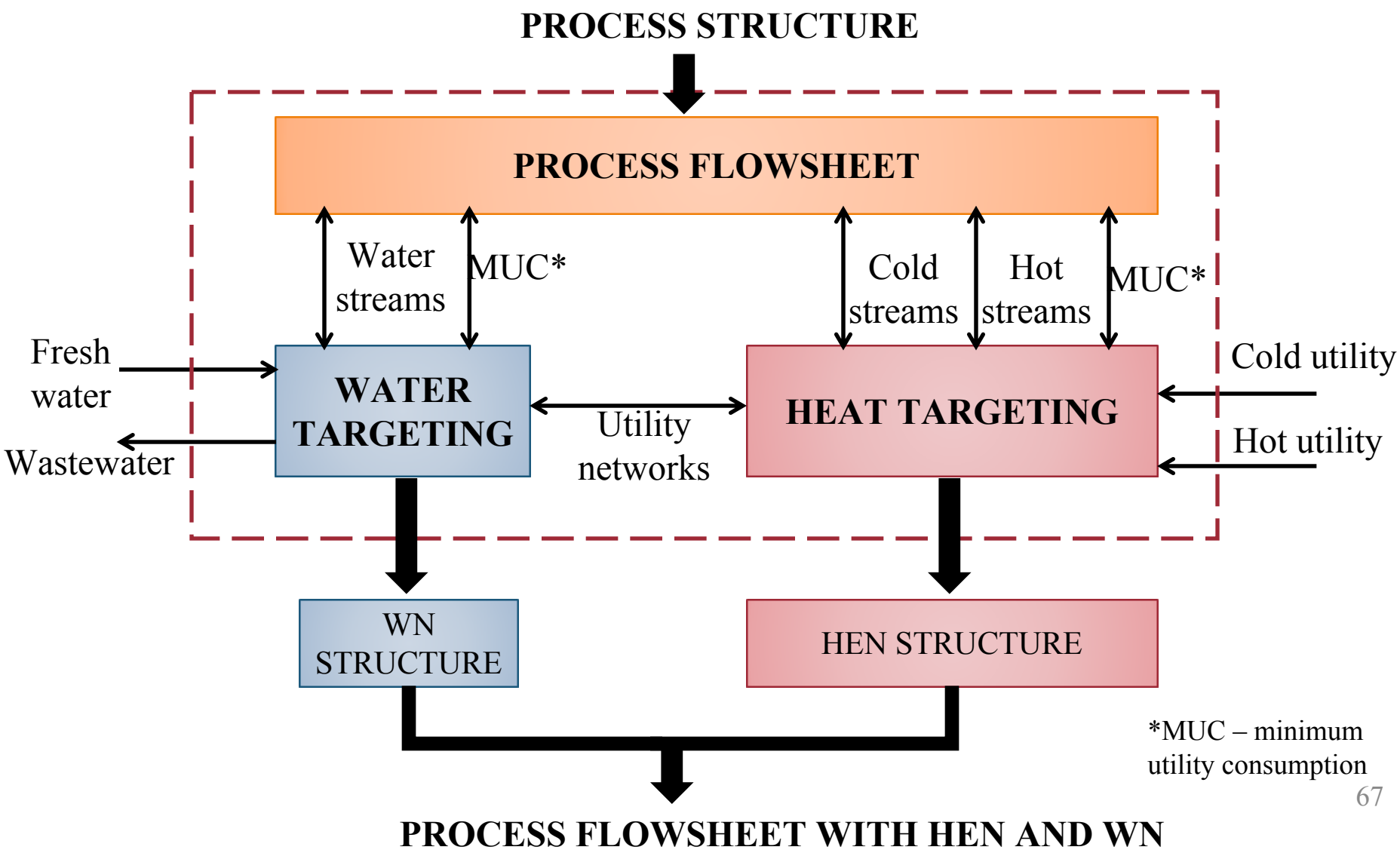

Target Minimum Utility Cost

Pinch Location Method

Duran, Grosmann (1986)

Basic idea: Assume pinch occurs at every inlet and determine maximum heating

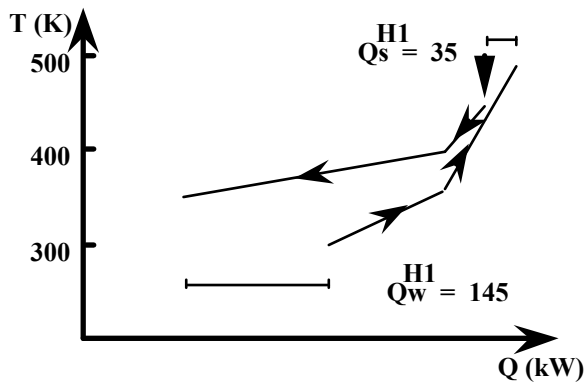

(a) Pinch candidate H1

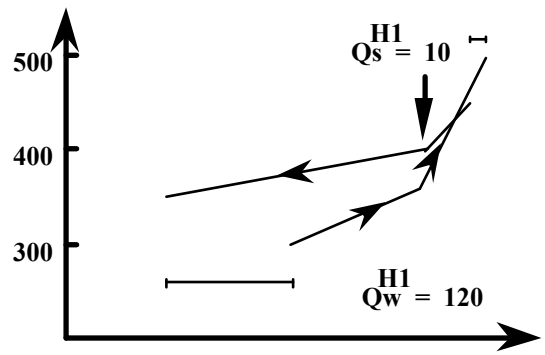

(b) Pinch candidate H2

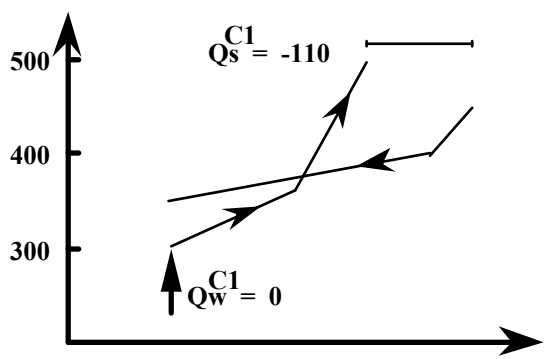

(c) Pinch candidate C1

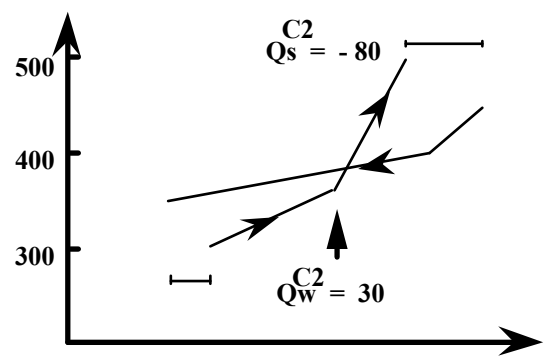

(d) Pinch candidate C2

LP targeting model (parametric in flows, temperatures)

$$\min\ C = f(x) + c_S Q_S + c_W Q_W$$
$$\text{s.t.}\quad h(x) = 0$$
$$g(x) \le 0$$

Min obj plus cost heating and cooling

Heat integration constraints

Heat balance above pinch point for heating utility

$$Q_S \ge \sum_{j=}^{n_C} f_j \left[\max\left\{0,\ t_j^{out} - \left(T^p - \Delta T_{min}\right)\right\} - \max\left\{0,\ t_j^{in} - \left(T^p - \Delta T_{min}\right)\right\} \right]$$

$$- \sum_{i=}^{n_H} F_i \left[\max\left\{0,\ T_i^{in} - T^p\right\} - \max\left\{0,\ T_i^{out} - T^p\right\} \right] \qquad p \in P$$

Total heat balance for cooling utility

$$Q_W = Q_S + \sum_{i=}^{n_H} F_i \left(T_i^{in} - T_i^{out}\right) - \sum_{j=}^{n_C} f_j \left(t_j^{out} - t_j^{in}\right)$$

$$Q_S,\ Q_W \ge 0, \qquad F_i \ge 0 \quad i = 1 \ldots n_H, \qquad f_j \ge 0 \quad j = 1 \ldots n_C \qquad x \in R^n$$

where T_p, $p \in P$ Pinch Candidate

Example Simultaneous Optimization and Heat Integration

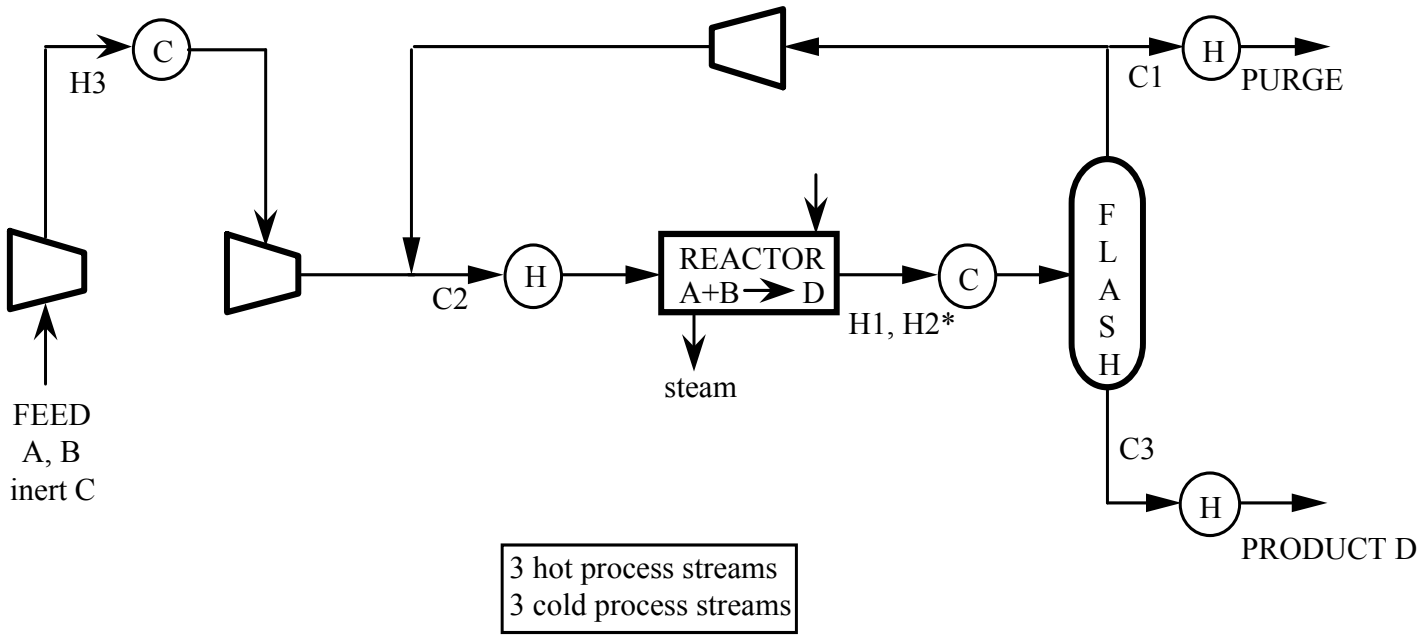

*H1 superheat to dew point
H2 dew point to supercool

Optimize operating conditions of flowsheet while integrating hot and cold streams to minimize utility cost

	Simultaneous		Sequential
ECONOMIC			
Expenses (x 10^6 $ / yr):			
Feedstock	22.6717		26.4166
Capital investment	3.7596		3.9108
Electricity compress	2.3774		2.4871
Heating utility	2.8244		14.4586
Cooling utility	0.7900		0.7247
Earnings (x 10^6 $ / yr):			
Product	41.5300		41.5300
Purge	4.5169		6.8242
Generated steam	5.6407		9.7441
Annual Profit	19.2645	90% HIGHER!	10.1005
TECHNICAL			
Overall conversion A	81.68		75.13 [%]
Pressure reactor	12.10		13.87 [atm]
Conversion per pass	30.43		37.53 [%]
Temp. inlet reactor	450.00		450.00 [□K]
Temp. outlet reactor	502.65		450.00 [□K]
Steam generated	10119.12		17479.60 [kW]
Pressure in flash	9.10		10.87 [atm]
Temperature flash	320.00		339.88 [□K]
Purge rate	9.66		19.66 [%]
Power compressors	11353.60		11877.44 [kW]
Heating utility	1684.27		8622.04 [kW]
Cooling utility	10632.04		9752.77 [kW]
Total heat exchanged	31962.20		28720.61 [kW]

Higher profit

Higher conversion

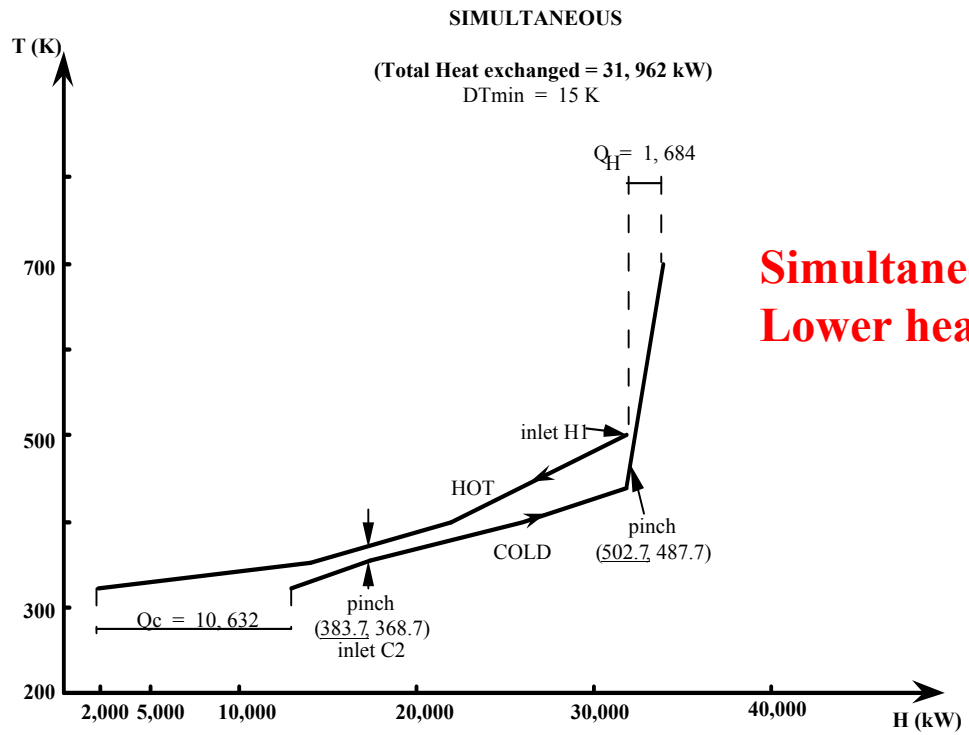

Simultaneous optimization
Lower heating

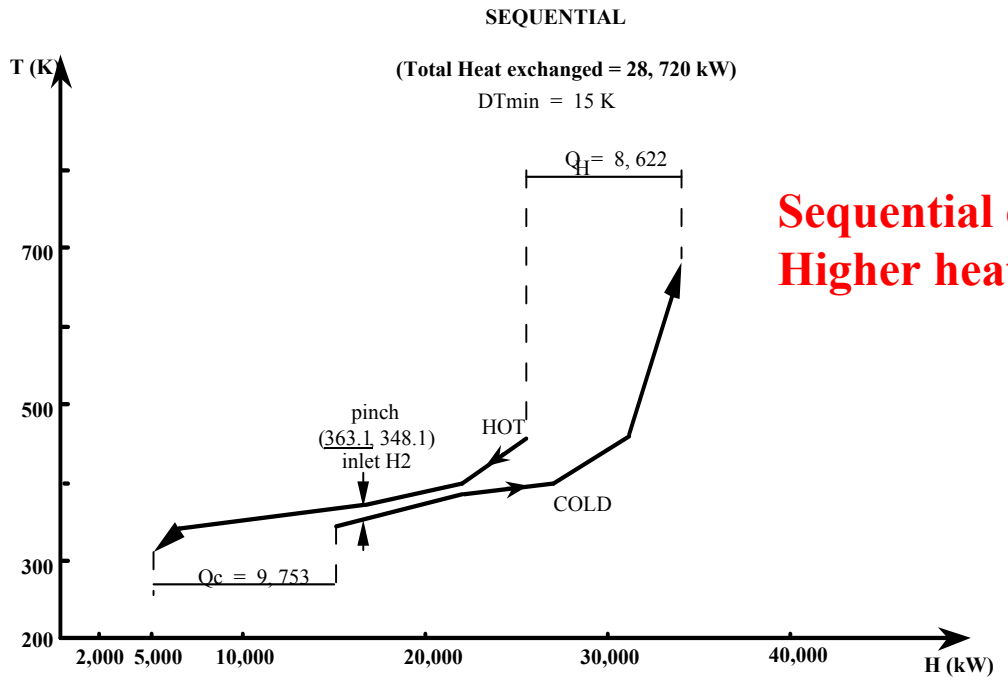

Sequential optimization
Higher heating

LP Targeting model for minimum freshwater consumption

Yang, Grossmann (2011)

Assumes only process units (reuse, recycle)

$$\min \quad Z = F_{fw}$$

s.t.

$$F^k = \sum_{i \in m_{in}} F^i \qquad \forall m \in MU, k \in m_{out}$$

$$F_k C_j^{kU} \geq \sum_{i \in m_{in}} F_i C_j^{iU} \qquad \forall j, \quad \forall m \in MU, k \in m_{out}$$

$$F^k = \sum_{i \in s_{out}} F^i \qquad \forall s \in SU, k \in s_{in}$$

$$C_j^k = C_j^i \qquad \forall j, \quad \forall s \in SU, \qquad \forall i \in s_{out,} k \in s_{in}$$

$$F^k = P_{in}^p \qquad \forall p \in PU, k \in p_{out}$$

$$F^i = P_{out}^p \qquad \forall p \in PU, i \in p_{in}$$

$$(F^i - Loss^p) C_j^i + L_j^p = (F^k - Gain^p) C_j^k$$

$$\forall j, \forall p \in PU, i \in p_{in}, k \in p_{out}$$

Mixer mass balances

Splitters mass balances

Process unit mass balances

Simultaneous optimization, heat and water integration

Utility cost

Freshwater cost

$$\min.\ \phi = F(x,u,v) + \sum_{i \in HU} c_H^i Q_H^i + \sum_{j \in CU} c_C^j Q_C^j + c_{fw} FW$$

$$\text{s.t. } h(x,u,v) = 0$$

$$g^P(x,u,v) \le 0$$

Process flowsheet constraints

$$g^{HEN}(u, Q_H, Q_C) \le 0$$

Heat targeting constraints

$$g^{WN}(v, FW) \le 0$$

Water targeting constraints

$$x \in X, \quad u \in U, \quad v \in V$$

Design parameters P, V, T, F

Heat integration parameters F_i, T_i^{in}, T_i^{out}

Water integration parameters

Simultaneous optimization, heat and water integration

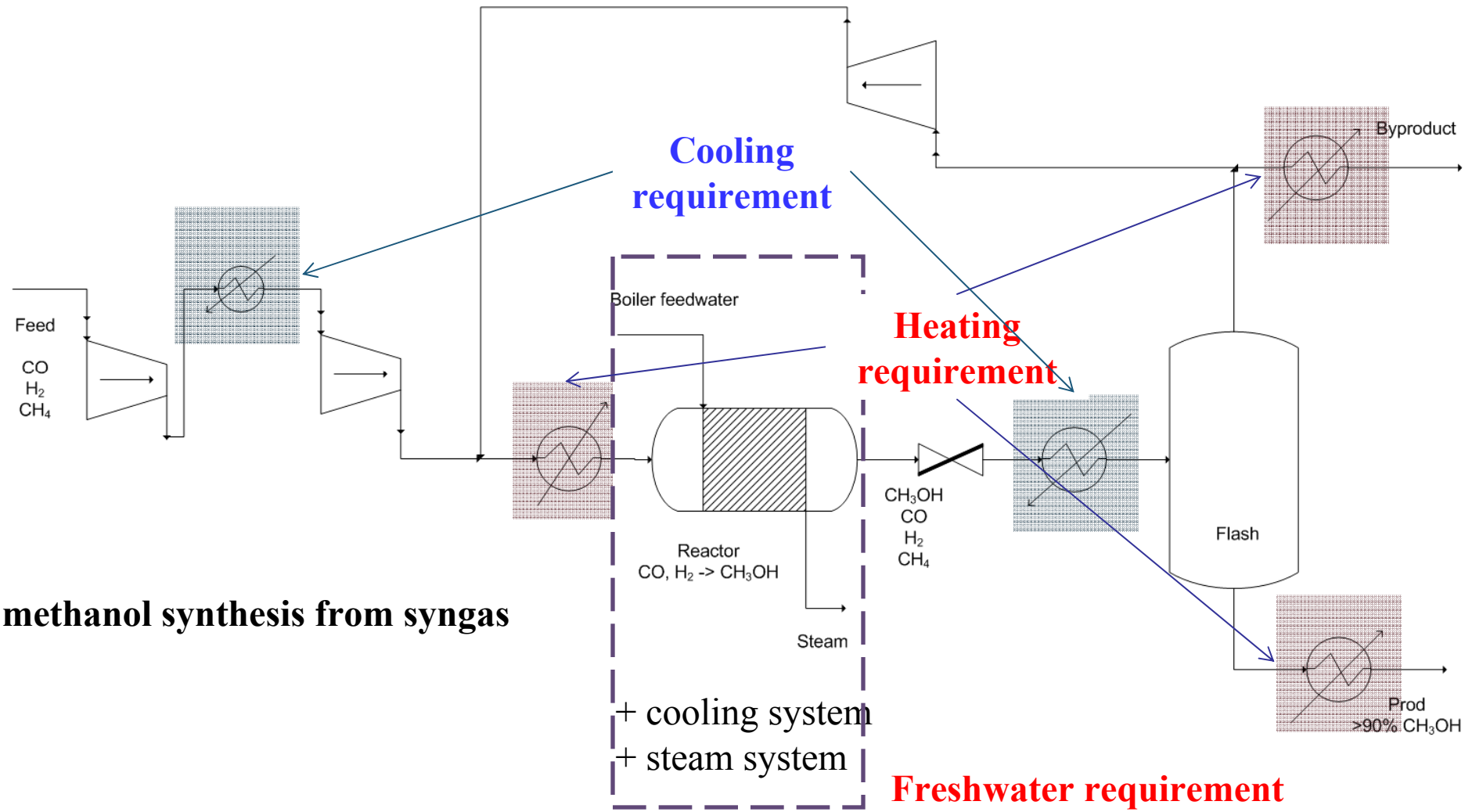

methanol synthesis from syngas

Sequential vs simultaneous comparison

		SEQUENTIAL	SIMULTANEOUS
Profit	**(1000 $/yr)**	**62,695**	**73,416**
Investment cost	**(1000 $)**	1,891	1,174
Operating costs and parameters			
	electricity (KW)	6.59	1.84
	freshwater (kmol/s)	202.4	162.5
	heating utility (10^9 KJ/yr)	0.29	0
	cooling utility (10^9 KJ/yr)	67.3	72.7
	Steam generated (10^9 kJ/yr)	2448	1965
	overall conversion	0.23	0.29
Material flowrate (10^6 kmol/yr)			
	feedstock	48.04	37.13
	product	10.89	10.89
	byproduct	9.95	4.41

17% improvement in profit

*** Solved with BARON**

Synthesis of Distillation Sequences

Example of MILP model for 4 component mixture

Separate mixture of A(lightest),B,C,D (heaviest) into pure components using sharp separators

Andrecovich, Westerberg (1985)

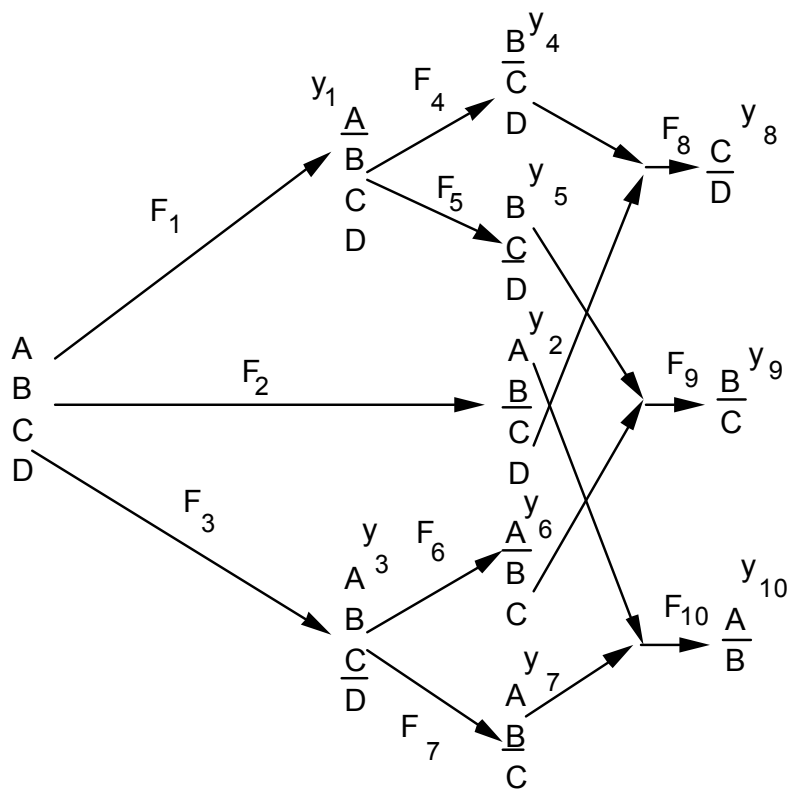

F_i flows, y_i existence columns

Network superstructure for 4 component example.

Data for example problem

a) Initial field

F_{TOT} = 1000 kgmol/hr

Composition (mole fraction)

A	0.15
B	0.3
C	0.35
D	0.2

b) Economic data and heat duty coefficients

k	Separator	Investment cost α_k, fixed,	β_k, variable	Heat duty coefficients, K_k
1	A/BCD	145	0.42	0.028
2	AB/CD	52	0.12	0.042
3	ABC/D	76	0.25	0.054
4	A/BC	25	0.78	0.024
5	AB/C	44	0.11	0.039
6	B/CD	38	0.14	0.040
7	BC/D	66	0.21	0.047
8	A/B	112	0.39	0.022
9	B/C	37	0.08	0.036
10	C/D	58	0.19	0.044

Cost of utilities:

Cooling water $C_C = 1.3$ (10^3\$hr/10^6kJyr)

Steam $C_H = 34$ (10^3\$hr/10^6kJyr)

Assume perfect recoveries

Split fractions in superstructure (using initial compositions)

$\xi_1^{A} = 0.15$

$\xi_1^{BCD} = 0.85$

$\xi_2^{AB} = 0.45$

$\xi_2^{CD} = 0.55$

$\xi_3^{ABC} = 0.8$

$\xi_3^{D} = 0.2$

$\xi_4^{B} = 0.353$

$\xi_4^{CD} = 0.647$

$\xi_5^{BC} = 0.765$

$\xi_5^{D} = 0.235$

$\xi_6^{A} = 0.188$

$\xi_6^{BC} = 0.812$

$\xi_7^{AB} = 0.5625$

$\xi_7^{C} = 0.44$

$\xi_8^{C} = 0.636$

$\xi_8^{D} = 0.364$

$\xi_9^{B} = 0.462$

$\xi_9^{C} = 0.538$

$\xi_{10}^{A} = 0.333$

$\xi_{10}^{B} = 0.667$

MILP model

Initial node in network

$$F_1 + F_2 + F_3 = 1000 \qquad (1)$$

For the remaining nodes in the network, mass balances for **each intermediate product.** Based on the recovery fractions, the mass balance for each intermediate product is as follows:

a) Intermediate (BCD) which is produced in column 1, and directed to columns 4 and 5,

$$F_4 + F_5 - 0.85\, F_1 = 0 \qquad (2)$$

b) Intermediate (ABC) which is produced in column 3, and directed to columns 6 and 7,

$$F_6 + F_7 - 0.8\, F_3 = 0 \qquad (3)$$

c) Intermediate (AB) which is produced in columns 2 and 7, and directed to column 10,

$$F_{10} - 0.45\, F_2 - 0.563\, F_7 = 0 \qquad (4)$$

d) Intermediate (BC) which is produced in columns 5 and 6, and directed to column 9,

$$F_9 - 0.765\, F_5 - 0.812\, F_6 = 0 \qquad (5)$$

e) Intermediate (CD) which is produced in columns 2 and 4, and directed to column 8,

$$F_8 - 0.55\, F_2 - 0.647\, F_4 = 0 \qquad (6)$$

Relating flows to the binary variables y:

$$F_k - 1000\, y_k \leq 0$$

$$F_k \leq U y_k \quad = 0,1\,, \quad k = 1,\ldots 10 \qquad (7)$$

Heat duties of condensers and reboliers, continuous variables Q_k , k = 1, ...10,

$$Q_k = K_k\, F_k\,, \quad k = 1,\ldots 10 \qquad (8)$$

where the parameters K_k are given in Table.

Objective function, minimization of the sum of the costs in the 10 columns.

$$\min \quad C = \sum_{k=1}^{10} (\alpha_k y_k + \beta_k F_k) + (34 \quad + 1.3) \sum_{k=1}^{10} Q_k$$

cost coefficients α_k , β_k , are given in Table.

Optimal separation sequence

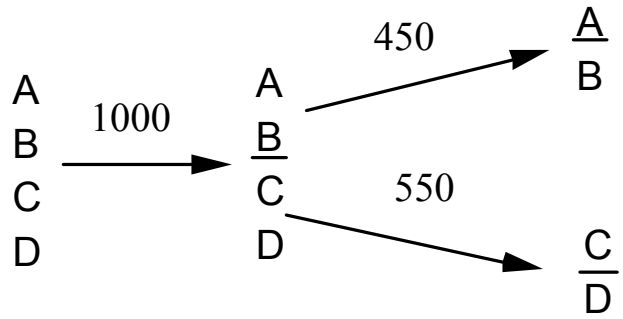

$3,308,000/yr

Second best solution. Make $y_2 = y_8 = y_{10} = 1$ infeasible

$$y_2 + y_8 + y_{10} \leq 2$$

Second best sequence

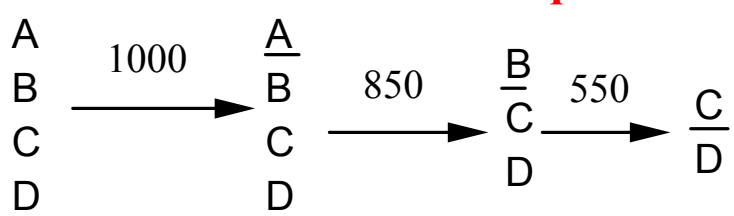

$3,927,000/yr

Olefin Separation System *(BP)*

(Lee, Foral, Logsdon, Grossmann, 2003)

Goal: Synthesize optimal separation system

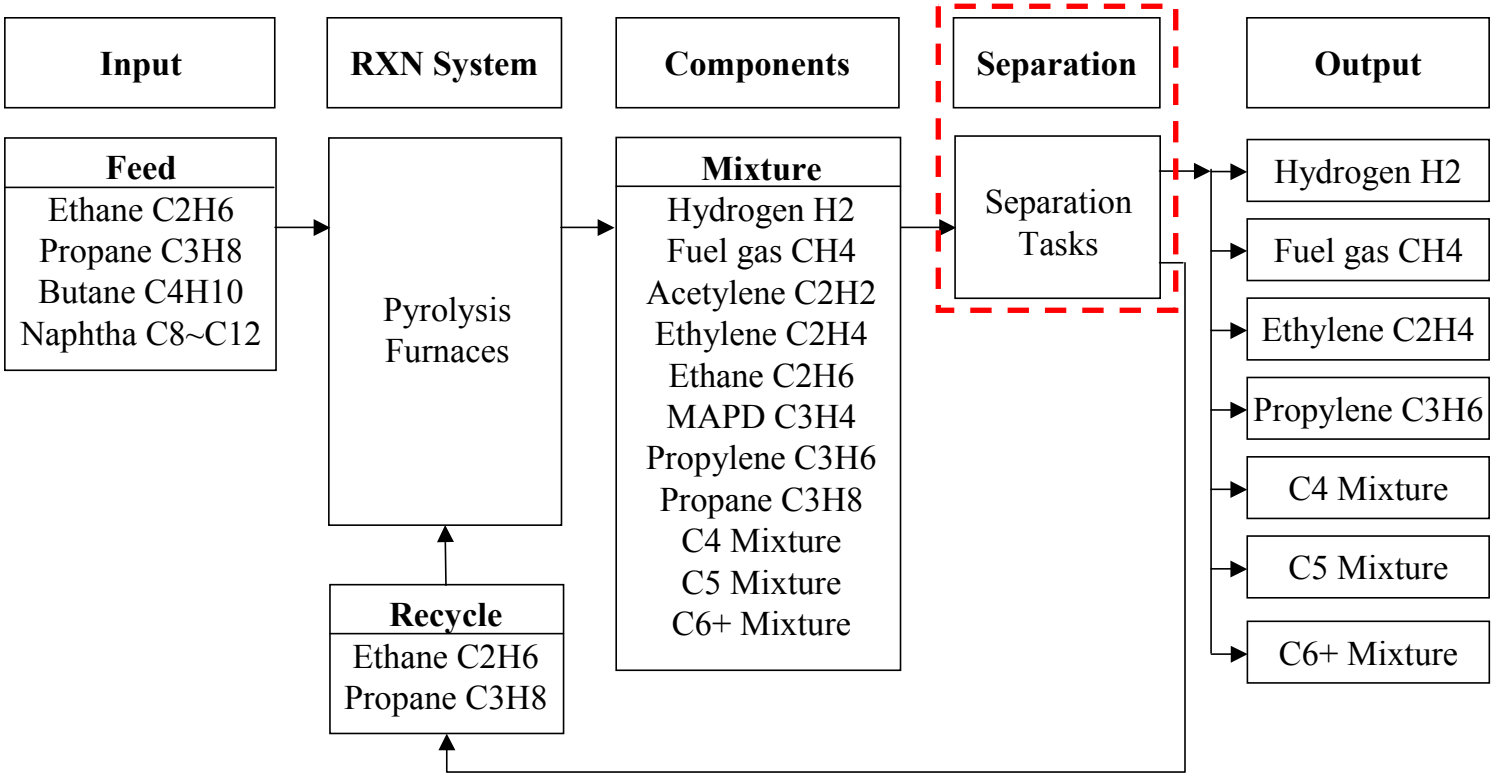

Process Superstructure

25 states
53 separation task

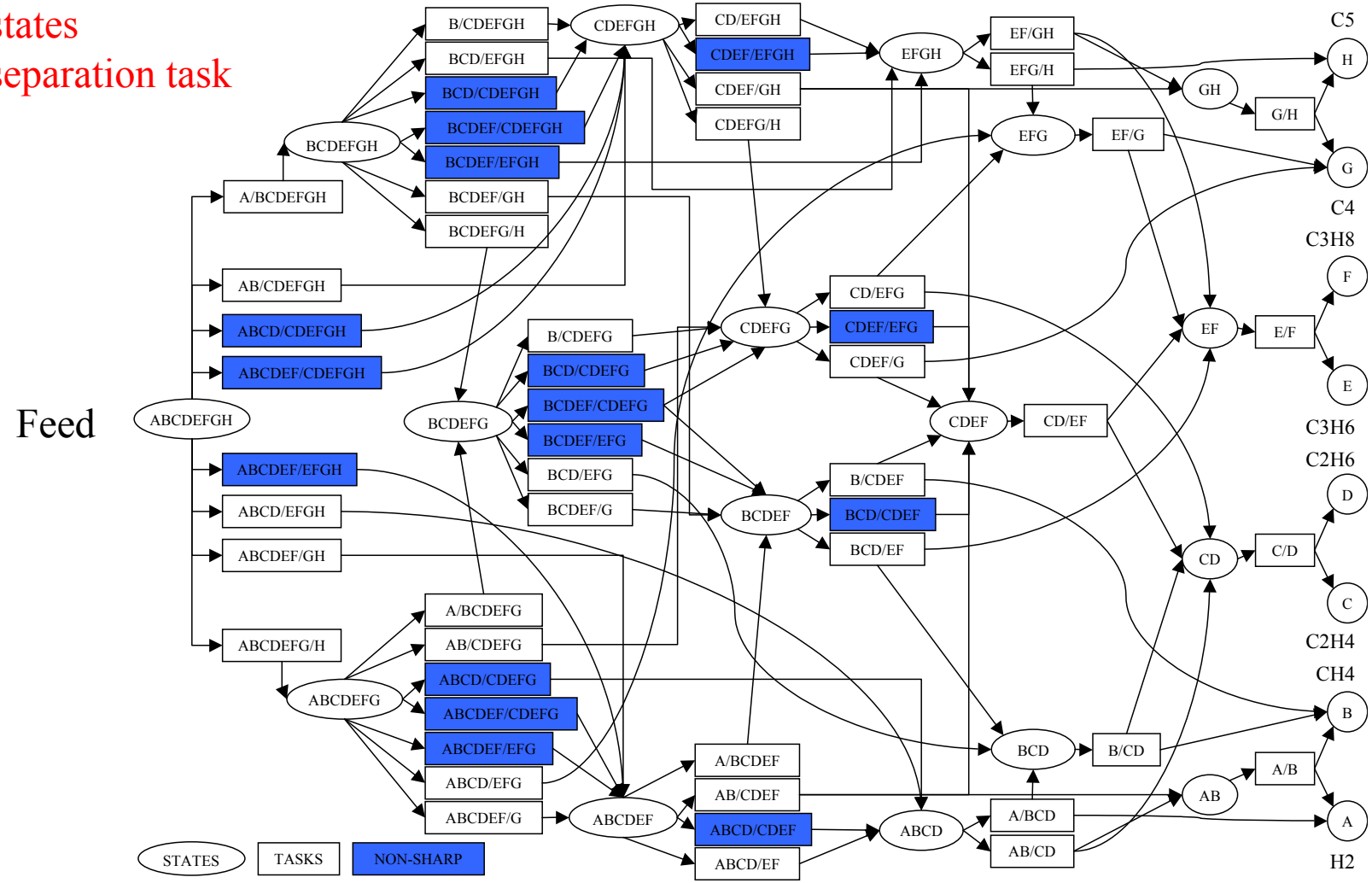

MINLP Model

- **GDP reformulated as a MINLP**

- **Problem Size**
  - No. of 0-1 variables = 5,800
  - No. of variables = 24,500
  - No. of constraints = 52,700

- **GAMS/DICOPT**
  - NLP solver: CONOPT2/ MIP solver: CPLEX
  - CPU time ~ 3 hrs on Pentium III PC

- **Verification: ASPENPLUS model**
  - Fixed process configuration is simulated/optimized

MINLP optimal solution

Dephlegmator first process **Total cost: 110.82 MM$/yr**

7 separation units

20M$/yr cost saving

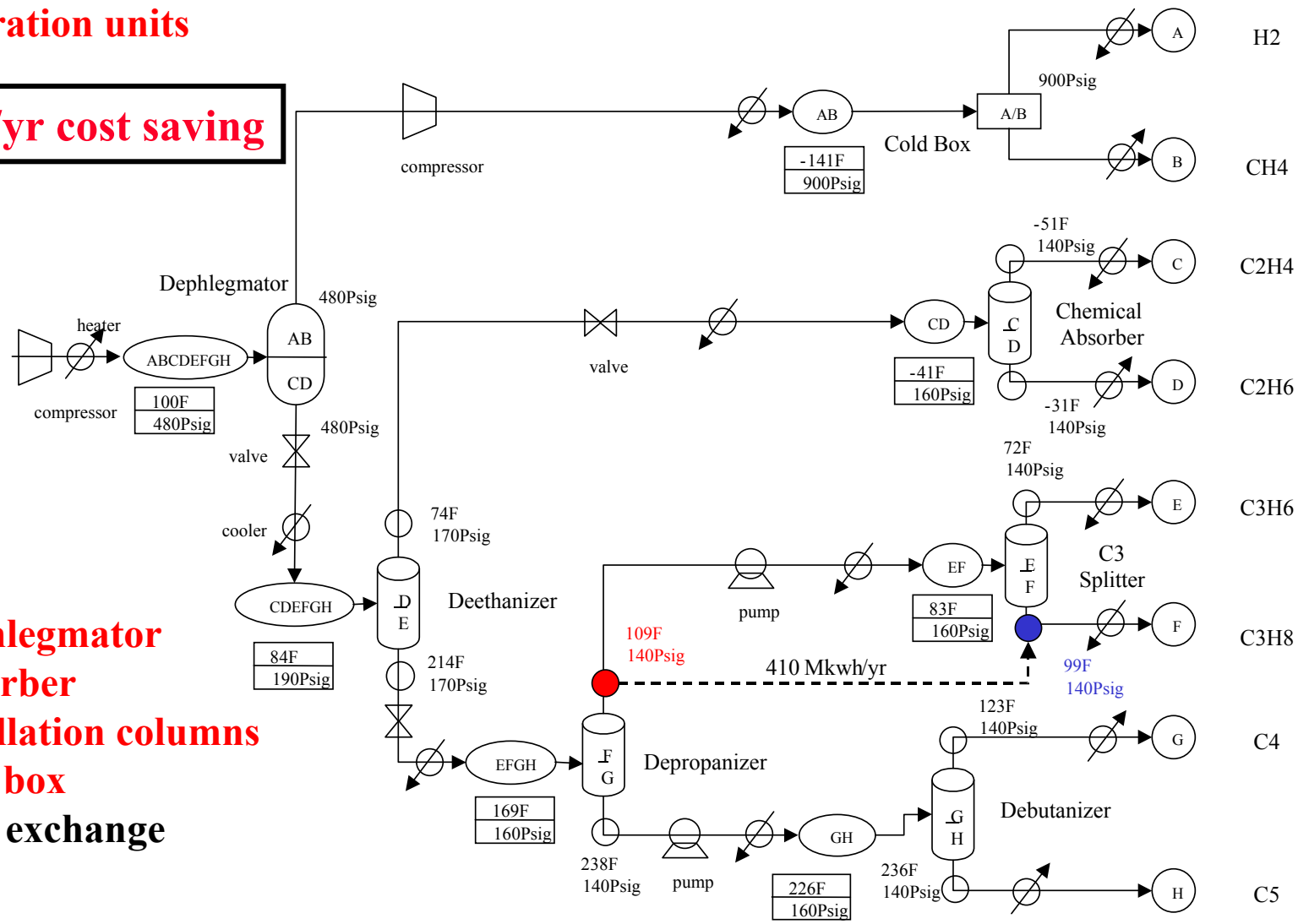

1 dephlegmator
1 absorber
4 distillation columns
1 cold box
1 heat exchange

Optimal Feedtray Location

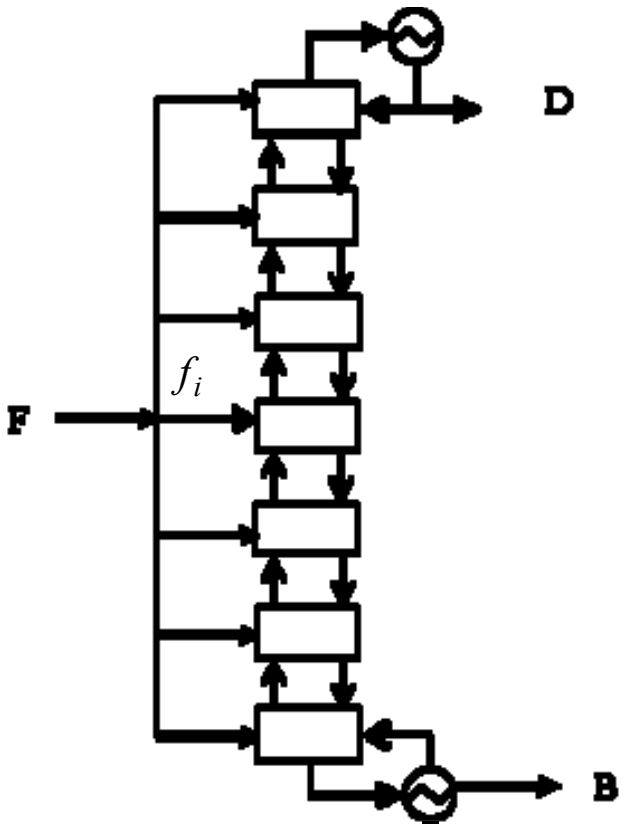

Sargent & Gaminibandara (1976)

NLP Formulation

$$\text{Min cost}$$

$$\text{st MESH eqtns}$$

$$\sum_{i \in Loc} f_i = F$$

NLP VMP: Variable-Metric Projection

Optimal Feedtray Location (Cont)

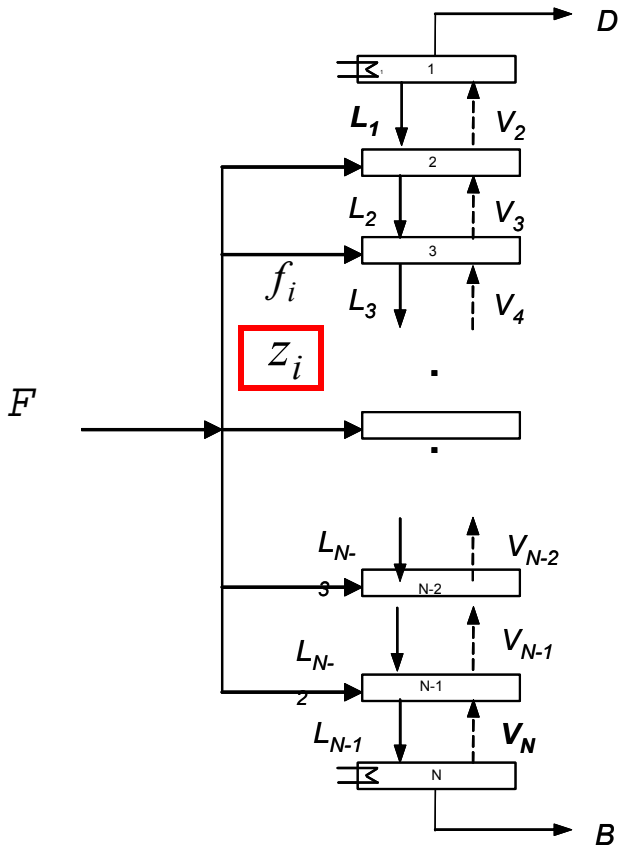

Viswanathan & Grossmann (1990)

MINLP Formulation

Min cost

st MESH eqtns

$$\sum_{i \in Loc} z_i = 1$$

$$\sum_{i \in Loc} f_i = F$$

$$f_i - F z_i \le 0 \quad i \in Loc$$

$$z_i = 0,1 \quad i \in Loc$$

***MINLP* DICOPT: AP-Outer Approximation-ER**

Remark: MINLP solves as relaxed NLP!

Feed tray composition tends to match composition of feed

Optimization of Number of Trays

Viswanathan & Grossmann (1993)

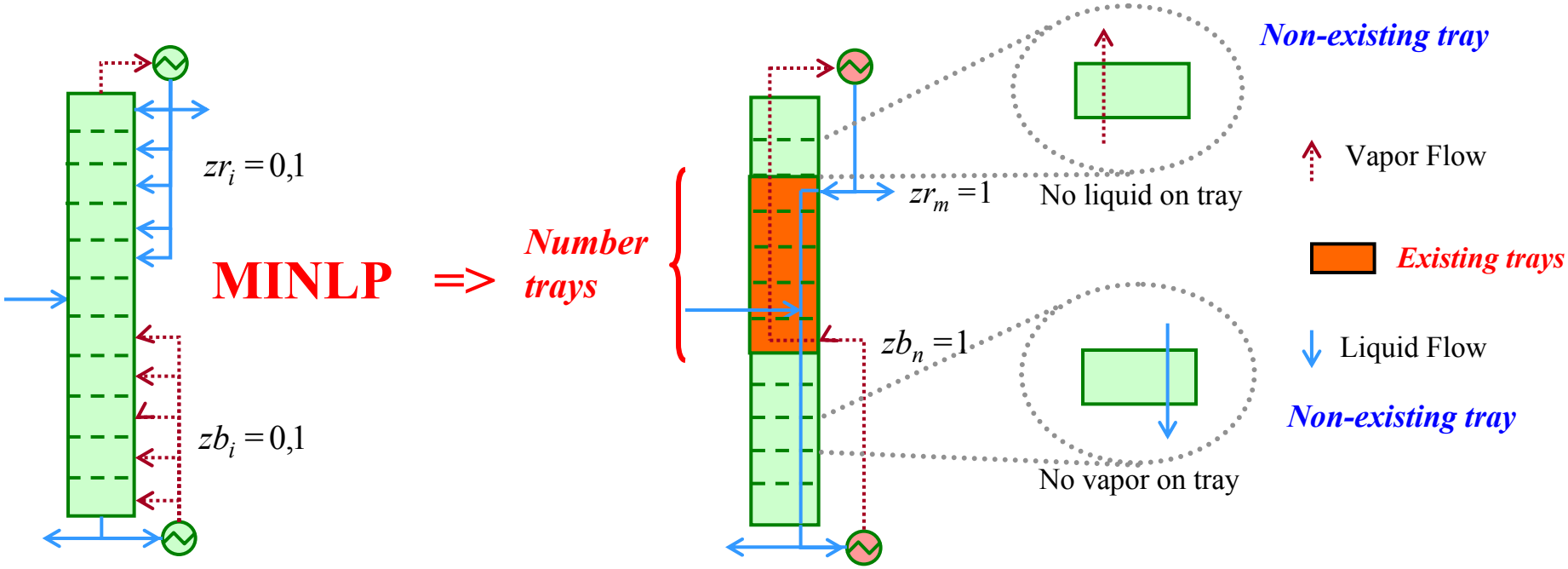

Discrete variables: **Number of trays, feed tray location.**

Continuous variables: **reflux ratio, heat loads, exchanger areas, column diameter.**

Zero flows- Discontinuities appear, convergence difficulties.

Redundant equations are solved- Increases CPU time.

Optimal Design Columns with Multiple Feeds

Air Products & Chemicals

Viswanthan & Grossmann (1993)

Separation Methanol - Water with 3 Feeds

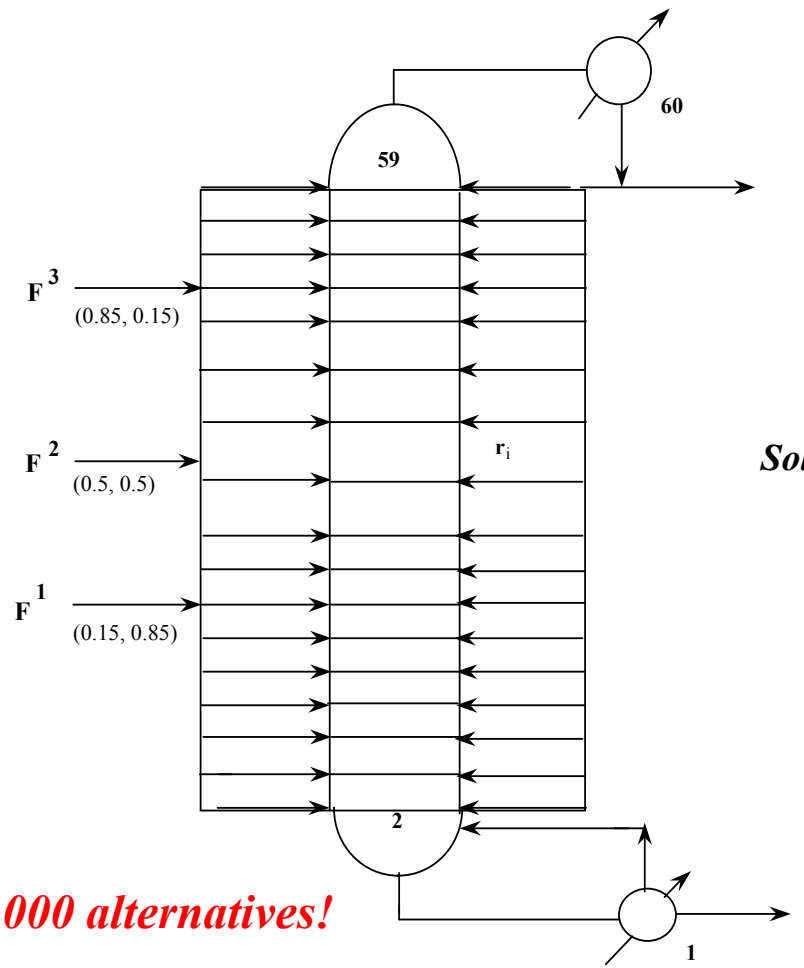

MINLP model

Virial/UNIQUAC

115 0-1 binary variables

1683 continuous variables

1919 constraints

Solved with DICOPT on a HP 9000/730

(5 major iterations, 45 min)

Optimal solution

Number of trays = 53

Feed location:

Feed 1	**Tray 4**
Feed 2	**Tray 6**
Feed 3	**Tray 12**

700,000 alternatives!

Disjunctive Programming Model

Yeomans & Grossmann (2000)

Permanent trays:

Feed, reboiler, condenser

Conditional trays:

Intermediate trays might be selected or not.

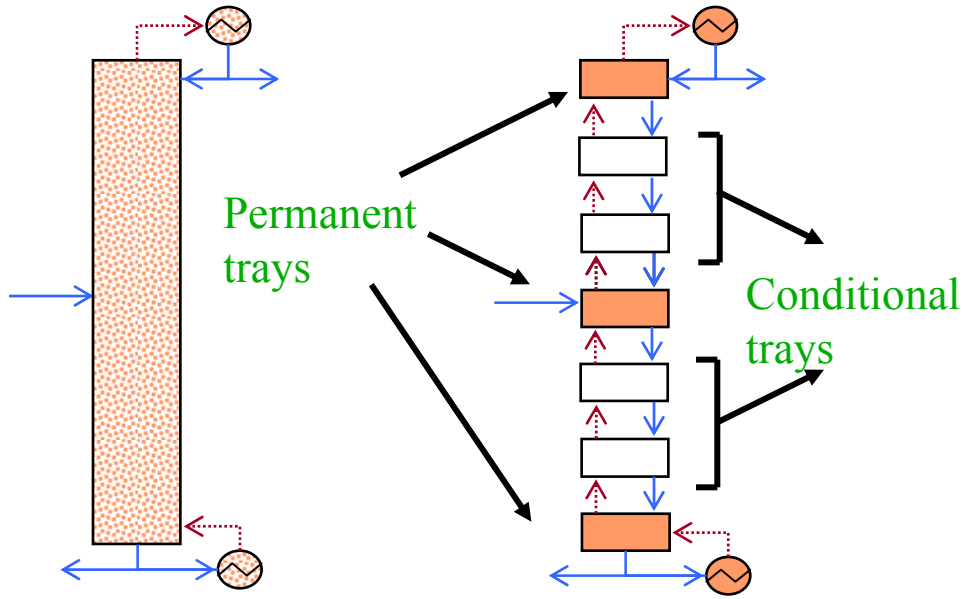

Trays not allowed to "disappear" from column:

VLE mass transfer if selected.

No VLE, trivial mass/energy balance if not selected

Disjunction

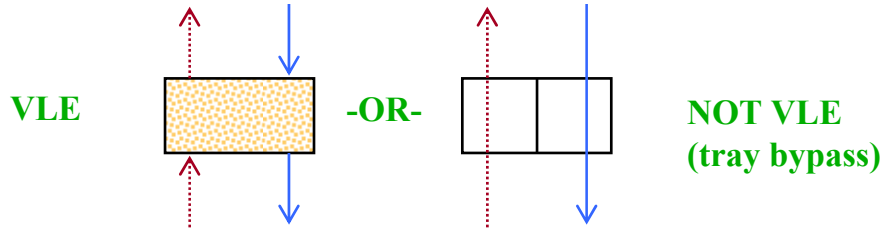

Single Column GDP Model

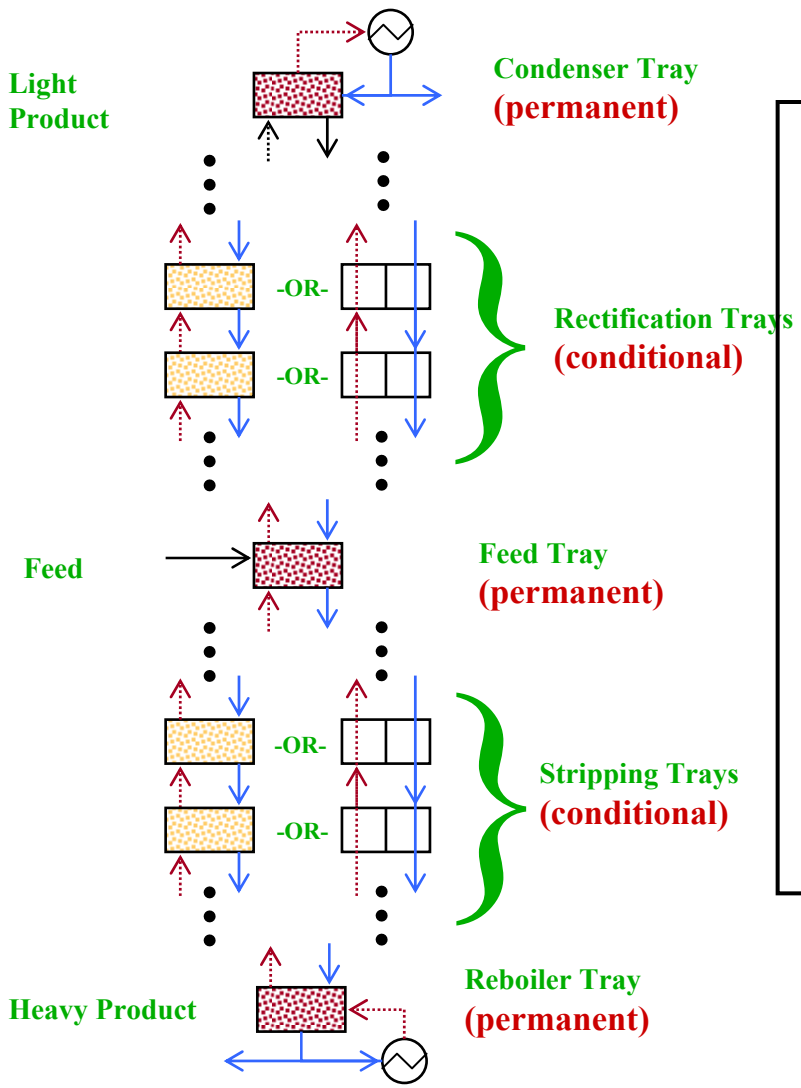

- Permanent and conditional trays:
  - MESH equations for condenser, reboiler and feed trays
  - Mass & energy balances for rectification and stripping trays.
- Conditional trays only:
  - Apply VLE constraints (Y_n=True) or not (Y_n=False)
  - Use disjunctions as modeling tool.

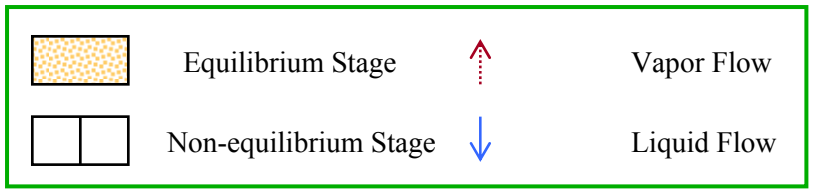

Example GDP

GDP Formulation

Mixture: Methanol/Ethanol/water

Feed Flow= 10 mol/sec

Feed composition= 0.2/0.2/0.6

P = 1.01 bar

Product Specification:
products composition reversible model

Upper bound No. Trays: 60

Ideal/Wilson models

Used Logic-based OA

Methanol/ethanol/water - GDP: fixed tray location

Preprocessing Phase: NLP tray-by-tray Models	
Continuous Variables	1597
Constraints	1544
Total CPU time (s)	**1.12**

Model Description	
Continuous Variables	**2933**
Binary Variables	**60**
Constraints	**2862**
Nonlinear nonzero elements	5656
Number of iterations	10
NLP CPU time (s)	9.14
MILP CPU time (s)	16.97
Total CPU time (s)	**401**

Optimal Solution	
Total number of trays	**41**
Feed tray	**20**
Column diameter (m)	0.51
Condenser duty (KJ/s)	387.4
Reboiler duty (KJ/s)	386.5
Objective value ($/yr)	**117,600**

- ***GAMS PIII, 667 MHz. with 256 MB of RAM.***
- ***CONOPT2 NLP subproblems/ CPLEX MILP subproblems.***

Reactive Distillation

Extension Single Column GDP Model

Jackson & Grossmann (2001)

- **Conditional Trays:**
  - **Active Trays**
    - **Separation with reaction may take place**
      - **Positive liquid holdup**
    - **Separation only make take place**
      - **Liquid holdup equals zero**

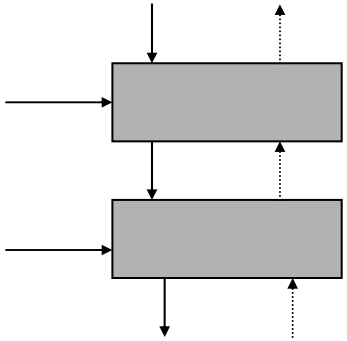

Active Trays

OR

- **Inactive Trays**
  - **Input-Output operation with no mass transfer and no reaction**

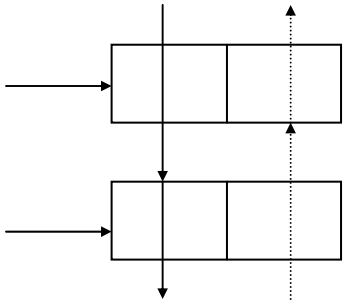

Inactive Trays

Example: Metathesis of Pentene

Conversion of 2-cis-pentene into 2-cis-butene and 3-cis-hexene:

$$2C_5H_{10} \Leftrightarrow C_4H_8 + C_6H_{12}$$

GDP Model: 25 discrete variables
731 continuous variables
730 constraints

- ***Annualized Cost: $1.167x10^6 per year***
- **Design/Operating Parameters:**
  - ***21 Trays; 5 Feeds***
  - **Column Diameter = 3.8ft**
  - **Column Height = 107ft**
  - **Boilup = 0.374**
  - **Reflux = 0.811**
  - **Reboiler Duty = 153 kW**
  - **Condenser Duty = 984 kW**
- ***Reaction Zone:***
  - ***Trays 1 – 18***
  - ***Total Liquid Holdup = 752 ft³***
  - ***90% Conversion of Pentene***

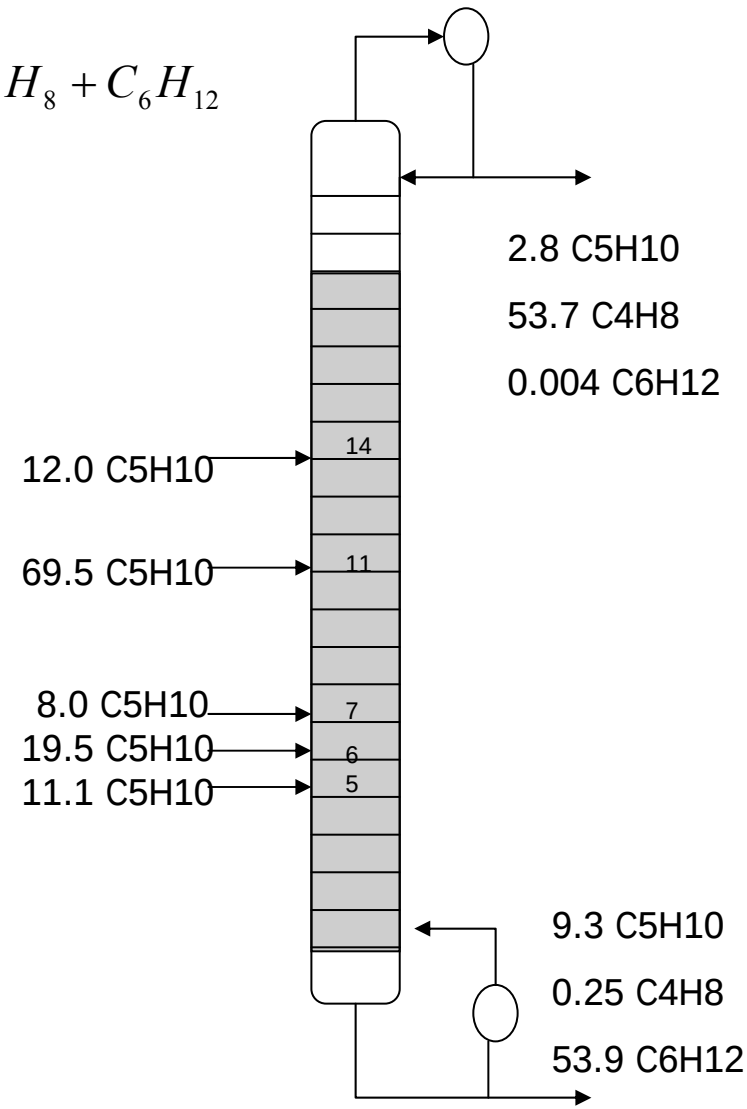

Synthesis of complex distillation systems

Mariana Barttfeld, Pio Aguirre/INGAR

Superstructure Representation

- Suitable for zeotropic and azeotropic mixtures
- General and automatically generated
- Includes thermodynamic information
- Embeds many possible alternative designs

Superstructure Formulation

GDP formulation

Solution Procedure

–Decomposition algorithm (decision levels)

- First level: selection of sections
- Second level: selection of trays in existent sections

–Initialization phase: reversible sequence approximation

–Robust and effective solutions

State Task Network

Andrecovich, Westerberg (1985)

Sharp separation 4 components

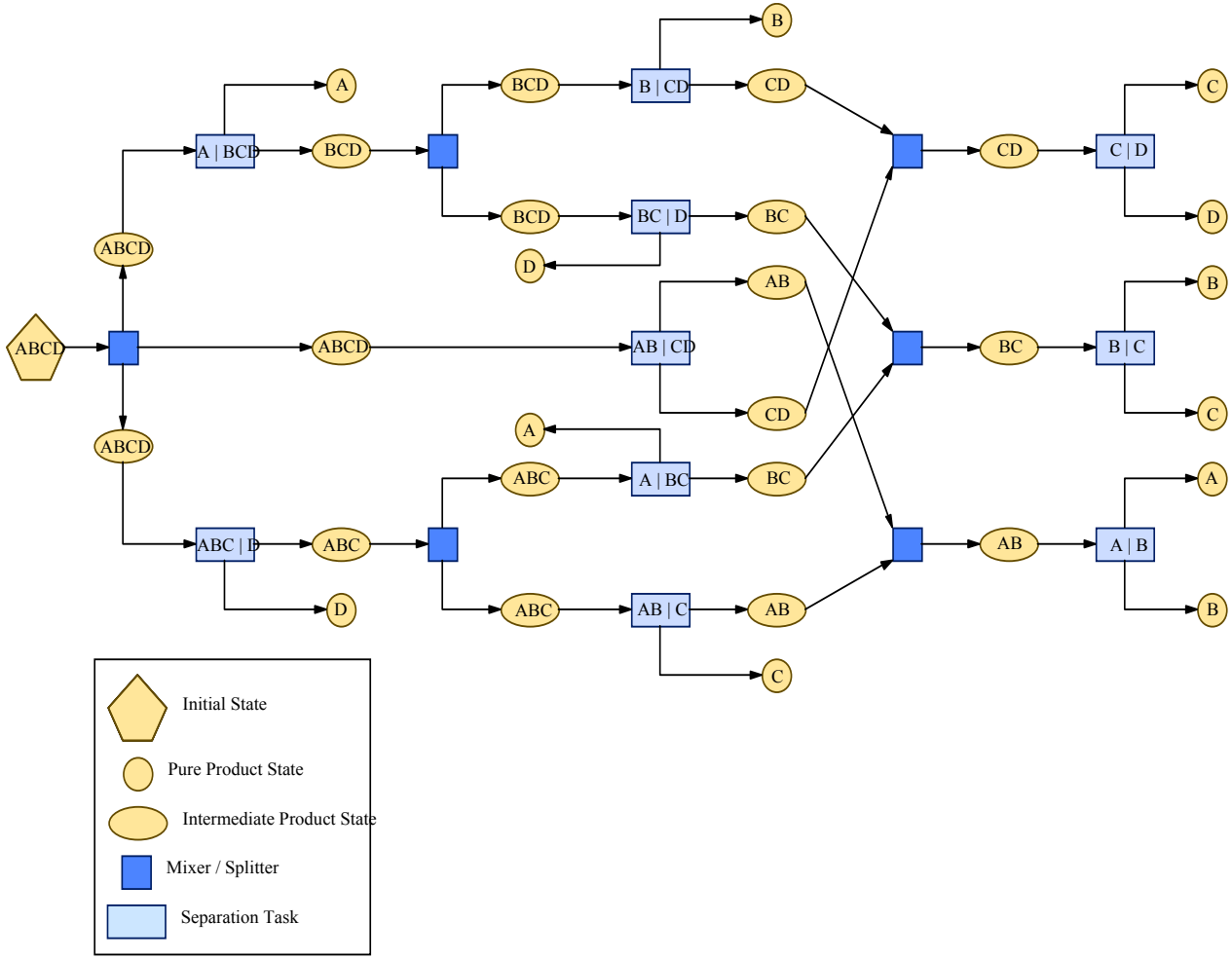

State Equipment Network (SEN)

Kravanja et al (1995)

Sharp separation 4 components

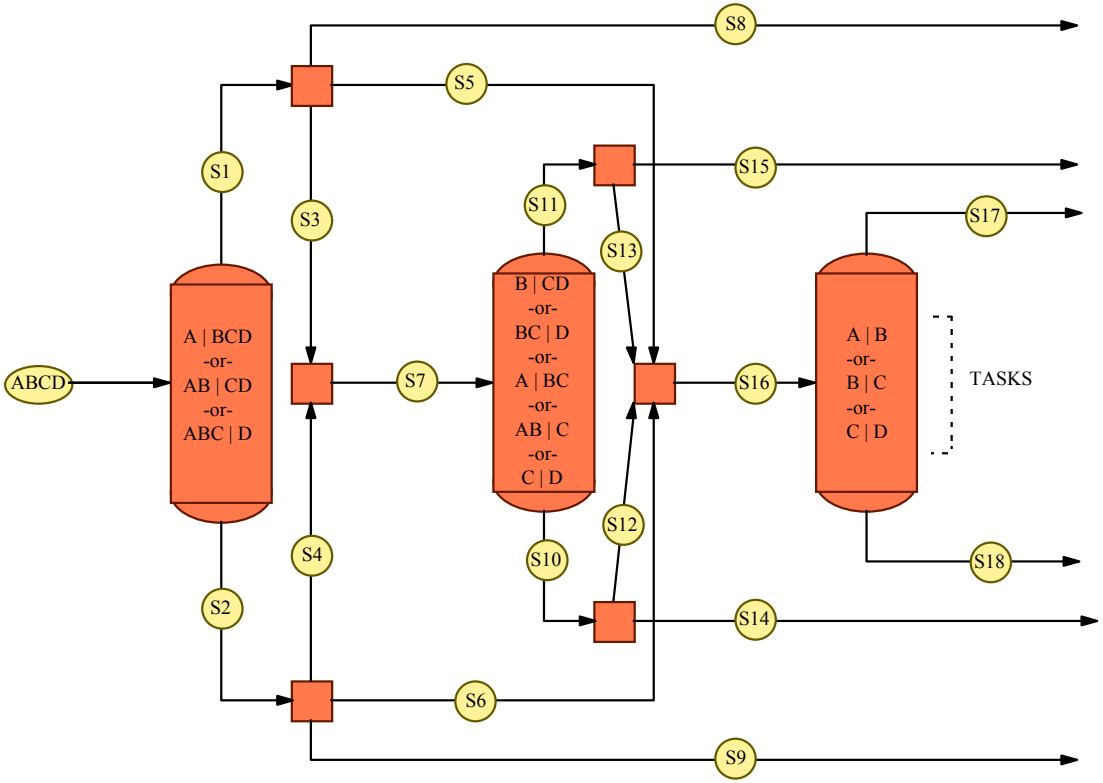

STATE DEFINITION

S1- A, AB, ABC	S6- CD	S11- B, BC, A, AB, C	S16- AB, BC, CD
S2- BCD, CD, D	S7- BCD, CD, ABC	S12- CD, BC	S17- A, B, C
S3- ABC	S8- A	S13- BC, AB	S18- B, C, D
S4- BCD, CD	S9- D	S14- C, D	
S5- AB	S10- CD, D, BC, C	S15- A, B C	

Superstructure for Complex Distillation Rigorous Model

Generated with the ***State-Task-Network (STN)*** ***(Sargent, 1998)***

STN Representation

(4 Component Zeotropic Mixture)

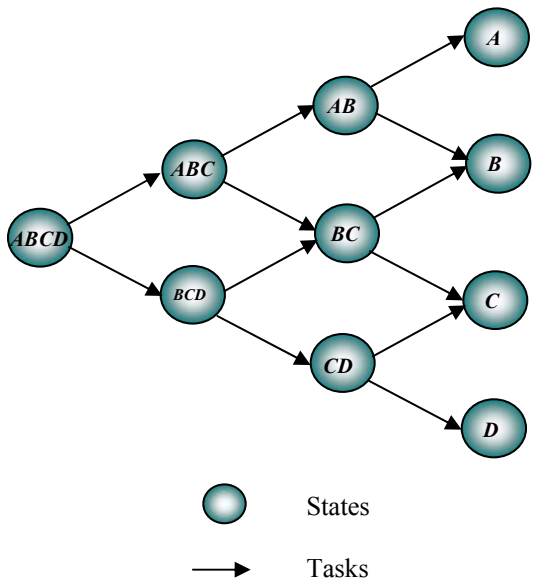

Sargent-Gaminibandara Superstructure

(4 Component Zeotropic Mixture)

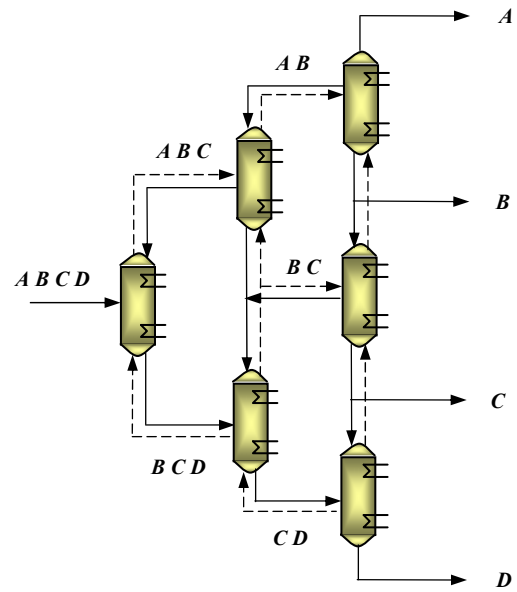

Superstructure Zeotropic Mixtures

Bartfeld, Aguirre, Grossmann (2004)

Based on the **Reversible Distillation Sequence Model (RDSM)** (Fonyo, 1974)

Motivated by thermodynamic initialization scheme

Automatically generated with the **State-Task-Representation (STN)**

Contains **2*NC*-1-1 columns** and ***NC*-1 level**

RDSM-based STN Representation

(4 Component Zeotropic Mixture)

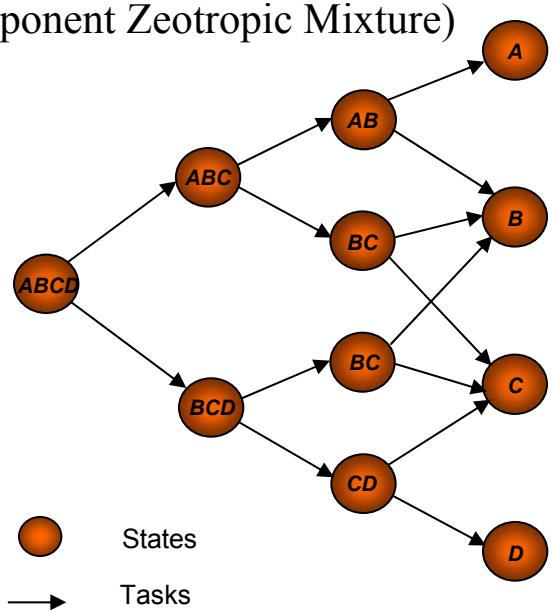

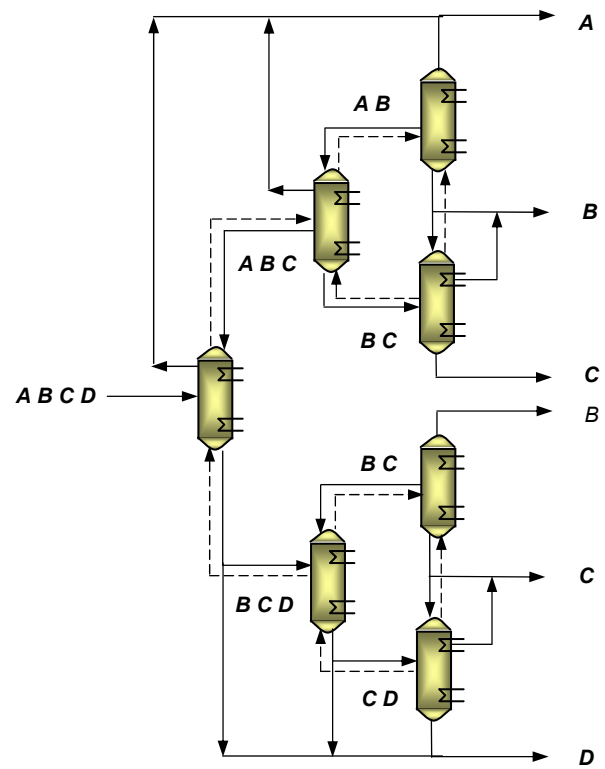

Avoid mixing intermediates

Modification for Azeotropic Mixtures

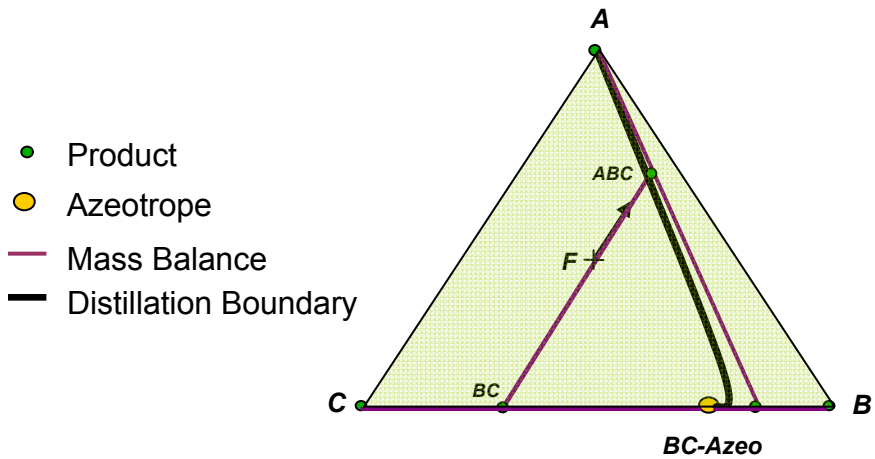

RDSM-based STN cannot be defined a priori

Composition diagram needed

Azeotrope recycled

RDSM-based STN Representation

(4 Component Azeotropic Mixture)

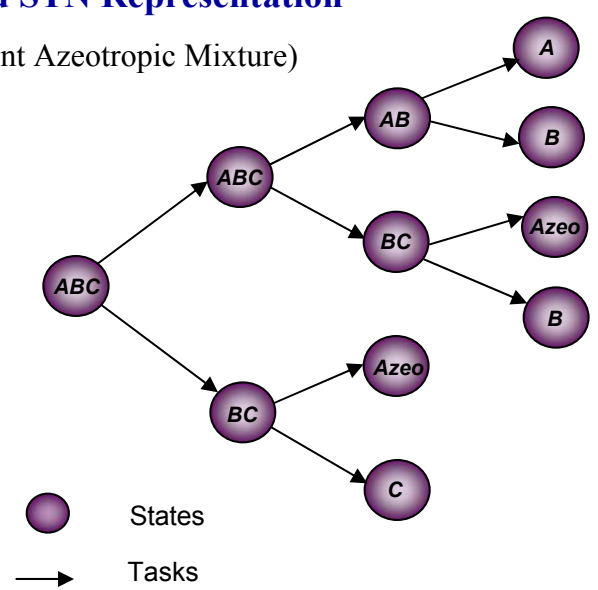

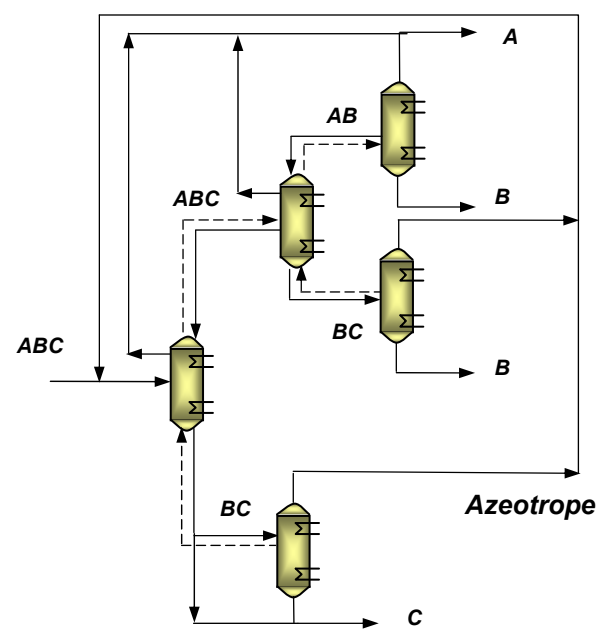

Mapping to Specific Designs

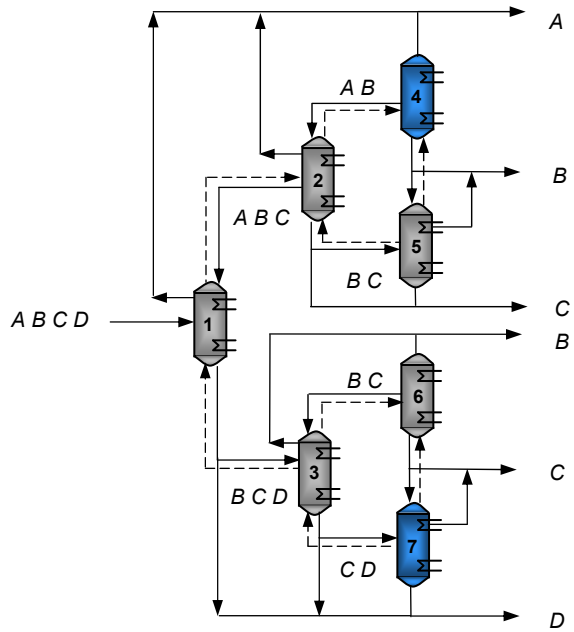

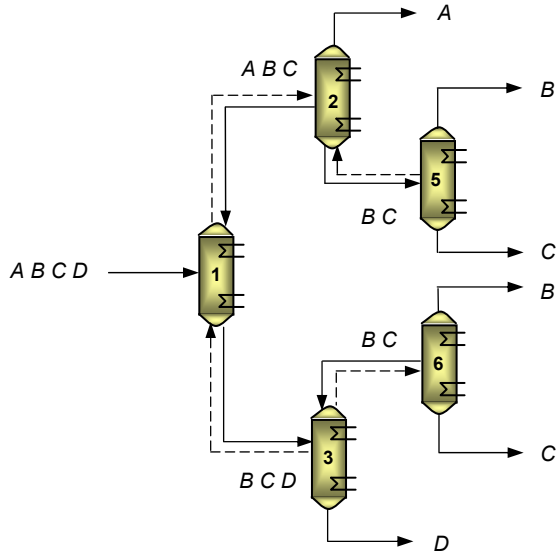

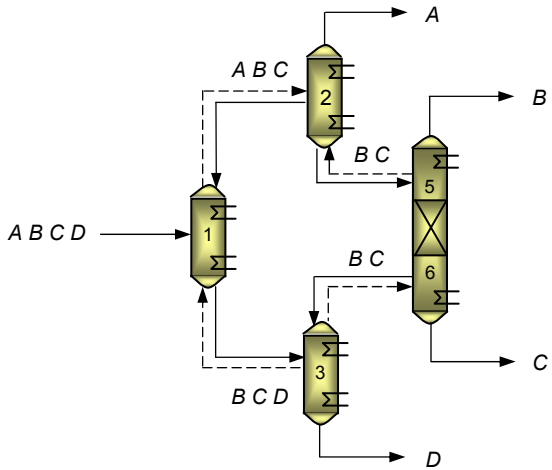

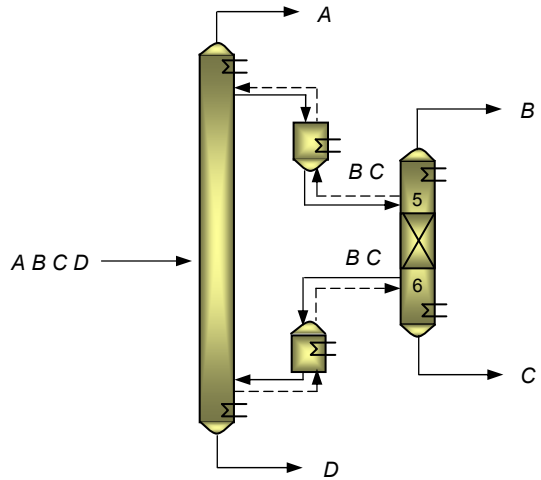

Discrete Decisions

Two hierarchical levels

1. Selection sections
2. Selection Trays

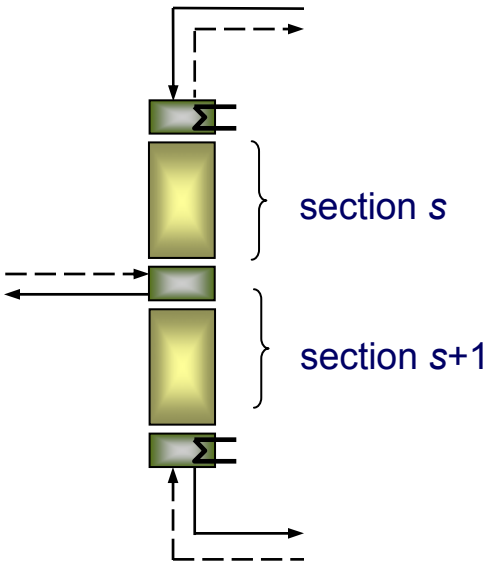

Selection of sections ➔ Configuration

If section selected ➔ $Y_s = True$

If section not selected ➔ $Y_s = False$

Configuration Model Formulation

$$\min \quad z = TAC$$

Objective Function

$$\left.\begin{aligned} s.t. \quad & g(x) \le 0 \\ & h(x) = 0 \end{aligned}\right\}$$

Overall Process Constraints

Tray Boolean Variables

Section Boolean Variables

DISJUNCTION

$$\left[\begin{array}{l} Y_s \\ \left[\begin{array}{l} W_n \\ f_{n,i}^L = f(T_n, P_n, x_{n,i}) \\ f_{n,i}^V = f(T_n, P_n, y_{n,i}) \\ f_{n,i}^L = f_{n,i}^V \\ T_n^V = T_n^L \\ LIQ_{n,i} = L_n \; x_{n,i} \\ VAP_{n,i} = V_n \; y_{n,i} \\ stg_n = 1 \end{array}\right] \vee \left[\begin{array}{l} \neg W_n \\ f_{n,i}^L = 0 \\ f_{n,i}^V = 0 \\ T_n^V = T_{n+1}^V \\ T_n^L = T_{n-1}^L \\ V_n = V_{n+1} \\ L_n = L_{n+1} \\ x_{n,i} = x_{n-1,i} \\ y_{n,i} = y_{n+1,i} \\ stg_n = 0 \end{array}\right] \\ ntray_s = \sum_{n \in sec_s} stg_n \qquad \forall\, n \in sec_s \end{array}\right] \vee \left[\begin{array}{l} \neg Y_s \\ f_{n,i}^L = 0 \\ f_{n,i}^V = 0 \\ T_n^V = T_{n+1}^V \\ T_n^L = T_{n-1}^L \\ V_n = 0 \\ L_n = 0 \\ x_{n,i} = x_{n-1,i} \\ y_{n,i} = y_{n+1,i} \\ ntray_s = 0 \end{array}\right] \quad \forall\, s \in S, i \in C$$

$$\left.\begin{aligned} \Omega(Y) = True \\ \Omega(W) = True \end{aligned}\right\}$$

Logic Relationships

$$x \in X, Y_s, W_n \in \{True, False\}$$

Detailed Cost Functions

Annual Cost

$$TAC = Cop + \frac{Cinv}{T_{dep}}$$

Operating Cost

$$Cop = \frac{Qc}{Cp_{agua}\ \Delta T_{con}}\ C_{agua} + \frac{Qh}{\Delta H_{vap}}\ C_{vapor}$$

Investment Cost

$$Cinv = Ccol + Ctray + Creb + Ccond$$

Column Cost

$$Ccol = k_{col}\ nt\ Dcol^{1.066}\ htray^{0.802}$$

Tray costs

$$Ctray = k_{tray}\ nt\ Dcol^{1.55}\ htray$$

Reboiler cost

$$Creb = k_{reb}\ Areb^{0.65}$$

Condenser Cost

$$Ccond = k_{cond}\ Acond^{0.65}$$

$$Dcol \geq Dtray_n$$

$$Dtray_n = \sqrt{k_d\ V_n \left(\sum_i PM_i\ y_{n,i} \right)^{0.5} \left(\frac{T_{vapor}\ R}{p} \right)^{0.5}}$$

Solution Strategy

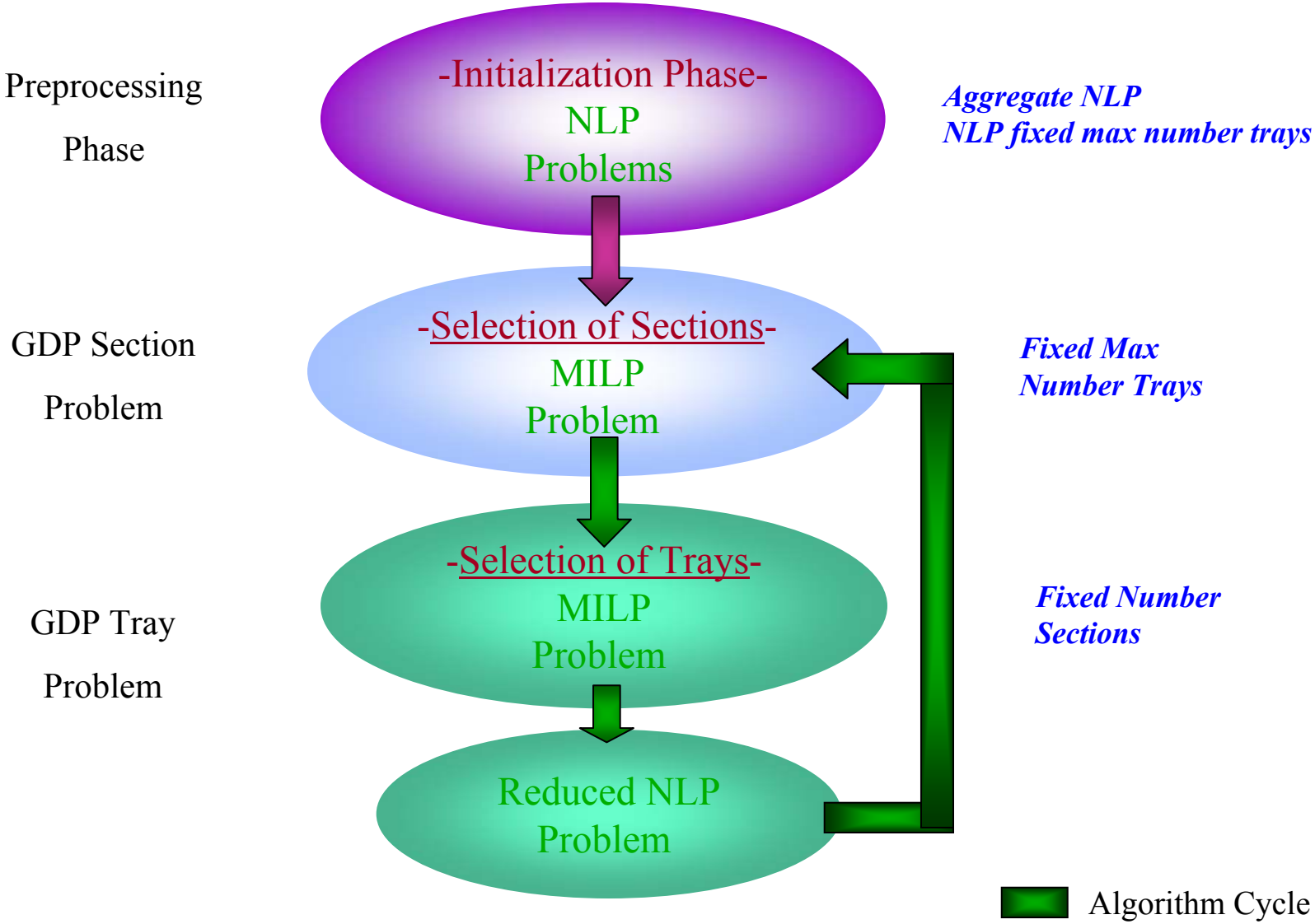

Zeotropic Example (1)

Problem specs

Mixture: **N-pentane/ N-hexane/ N-heptane**
Feed composition: 0.33/ 0.33/ 0.34
Feed: 10 moles/s
Pressure: 1 atm
Max no trays: 15 (each section)
Min purity: 98%
Ideal thermodynamics

Superstructure

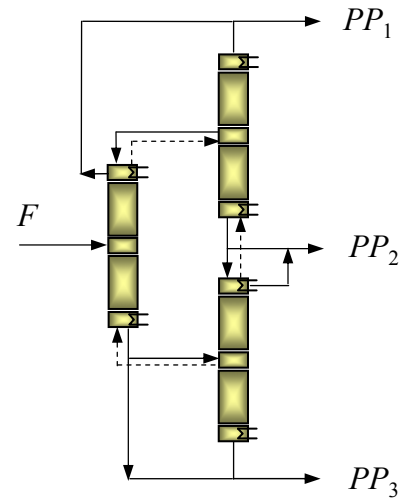

Initialization

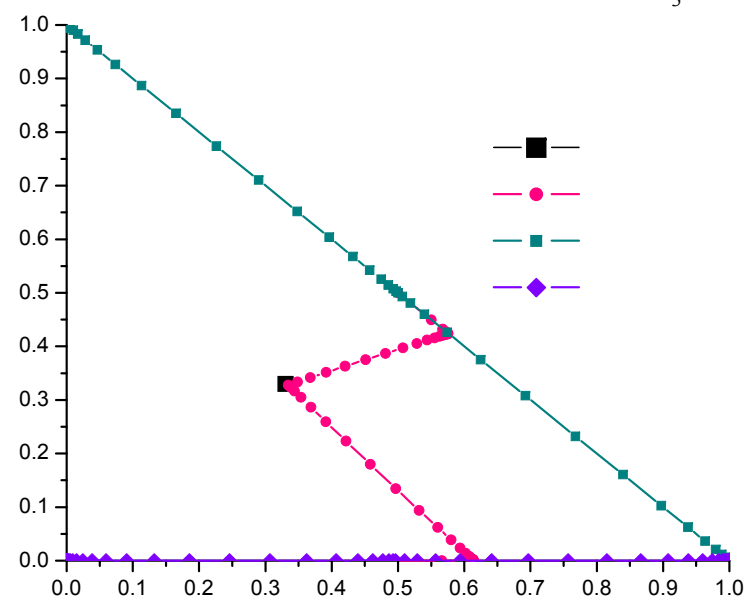

GDP Model

Discrete Variables	**96**
Continuous Variables	**3301**
Constraints	**3230**

Zeotropic Example (2)

Optimal Configuration
$140,880 /yr

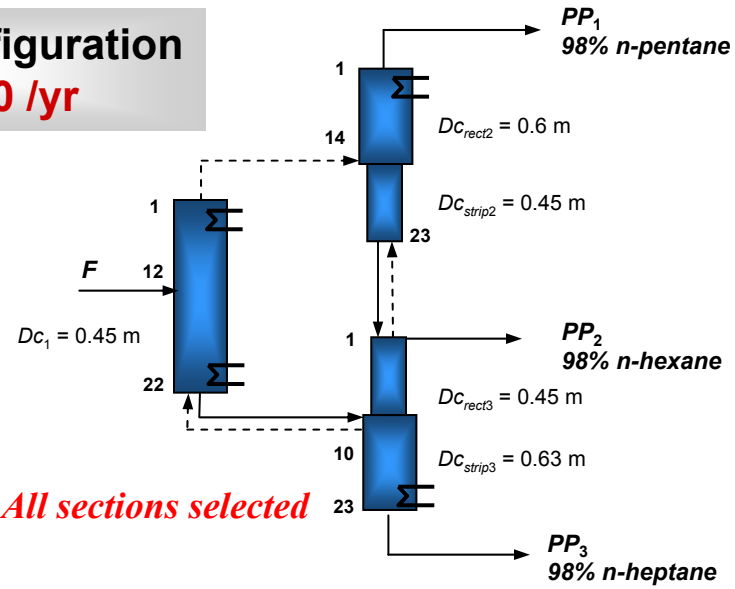

All sections selected

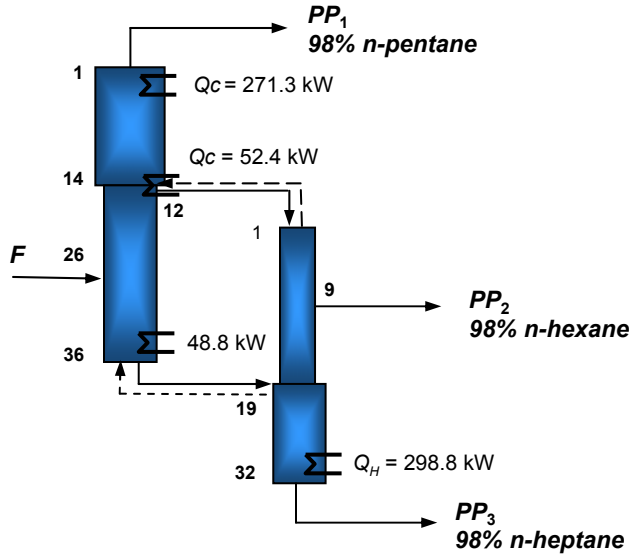

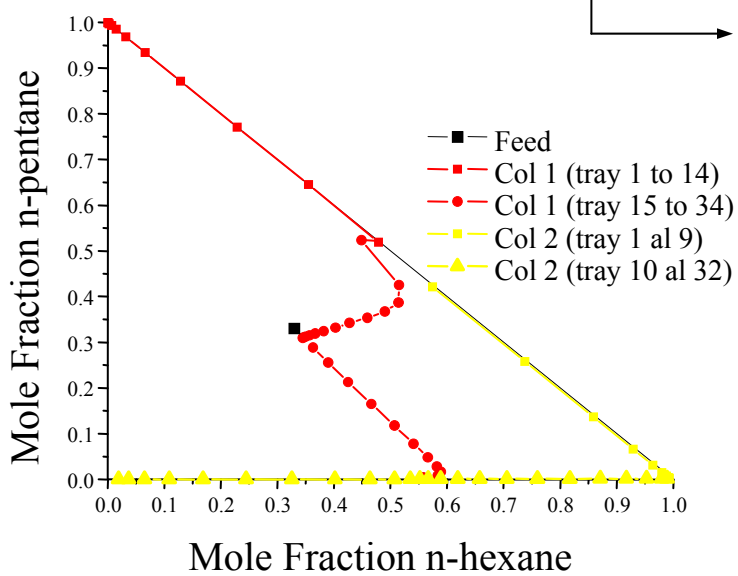

Optimal Design	
Annual cost ($/year)	140,880
Preprocessing(min)	2.20
Subproblems NLP (min)	6.97
Subproblems MILP (min)	2.29
Iterations	5
Total solution time (min)	11.46
667MHz. Pentium III PC	

Zeotropic Example (3)

Optimal Configuration
$140,880 /yr

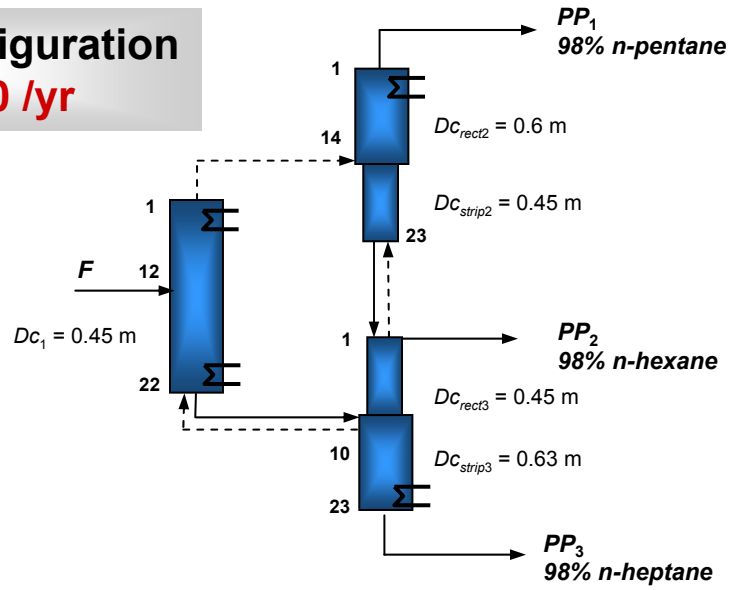

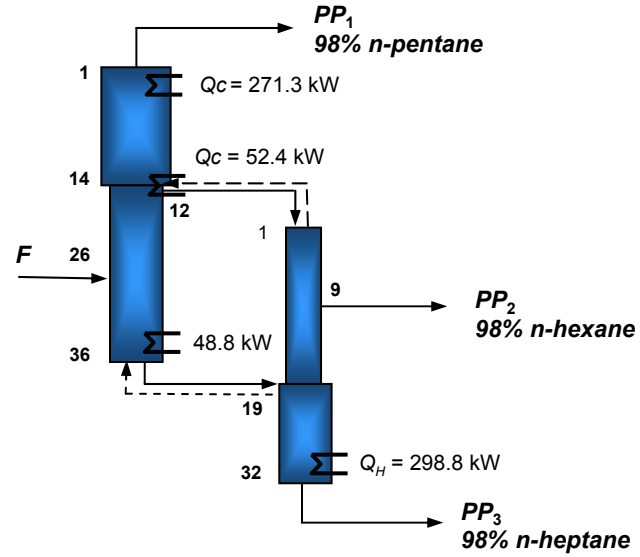

Configuration Side-Rectifier **$143,440 /yr**

Direct Sequence **$145,040 /yr**

Optimal Design	
Annual cost ($/year)	**140,880**
Preprocessing(min)	**2.20**
Subproblems NLP (min)	**6.97**
Subproblems MILP (min)	**2.29**
Iterations	**5**
Total solution time (min)	**11.46**
667MHz. Pentium III PC	

Azeotropic Example

Bartfeld, Aguirre, Grossmann (2004)

Problem Specs

Mixture: **Methanol/ Ethanol/ Water**
Feed composition: 0.5/ 0.3/ 0.2
Feed: 10 moles/s
Pressure: 1 atm
Max no. trays: 20 (per section)
Min purity: 95%
Ideal/Wilson models

Superstructure

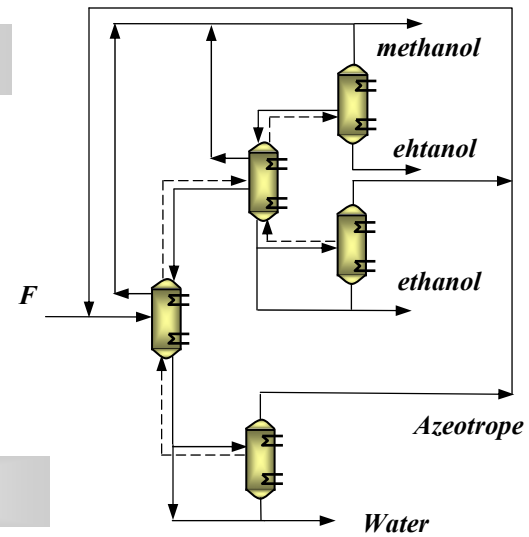

Initialization

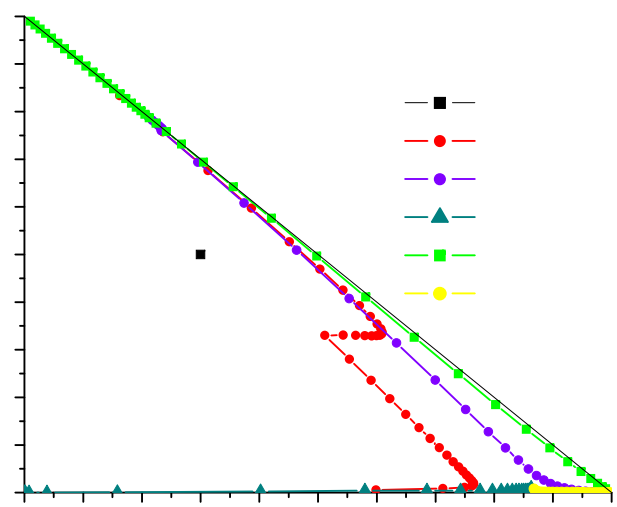

GDP Model

Discrete Variables	**210**
Continuous Variables	**9025**
Constraints	**8996**

Azeotropic Example

Product Specifications 95%

Optimal Configuration **$318,400 /yr**

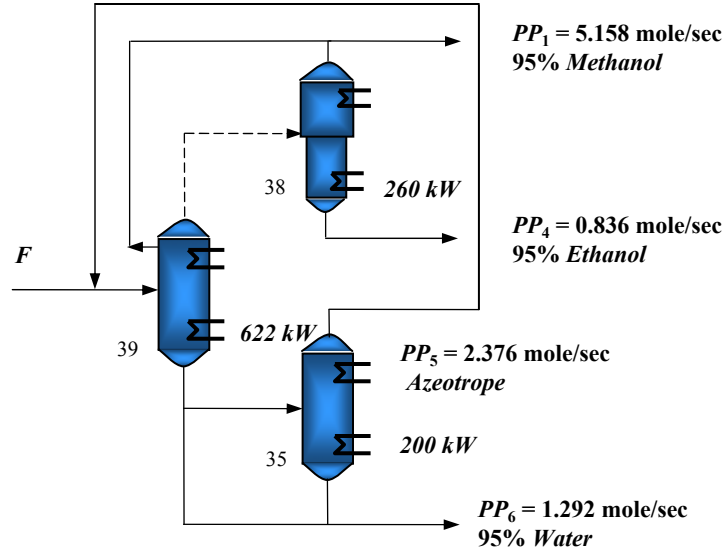

Profiles Optimal Configuration

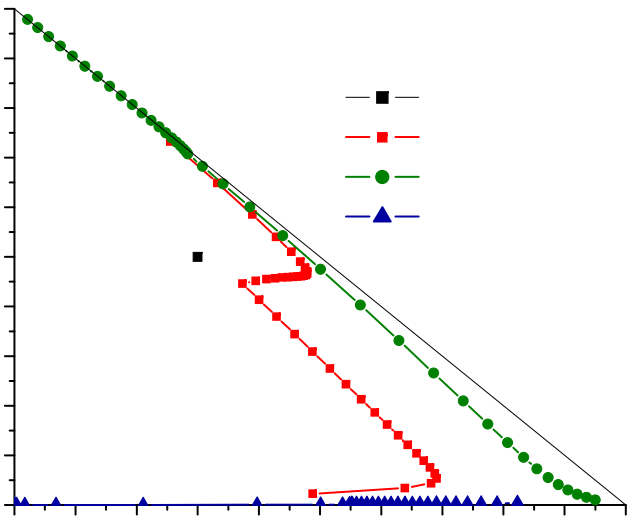

4 out of 10 sections deleted

Optimal Solution	
Annual Cost ($/year)	**318,400**
Preprocessing (min)	**6.05**
Subproblems NLP (min)	**36.3**
Subproblems MILP (min)	**3.70**
Iterations	**3**
Total Solution Time (min)	**46.01**
667MHz. Pentium III PC	

Elements for Flowsheet Superstructures

Yeomans, Grossmann (2000)

- **STATES:** Intensive and extensive physical and chemical properties of a stream.
  - Quantitative (composition, temperature)
  - Qualitative (phase, components present)

- **TASKS:** Physical or chemical transformations between adjacent states (momentum, heat and mass transfer operations).
  - Permanent- Valid throughout flowsheet.
  - Conditional- May not exist for a given flowsheet.

- **EQUIPMENT:** Physical device that executes a task (design equations and parameters)
  - Permanent or Conditional.

State Task Network

- First step: State and Task Identification in process flowsheet.

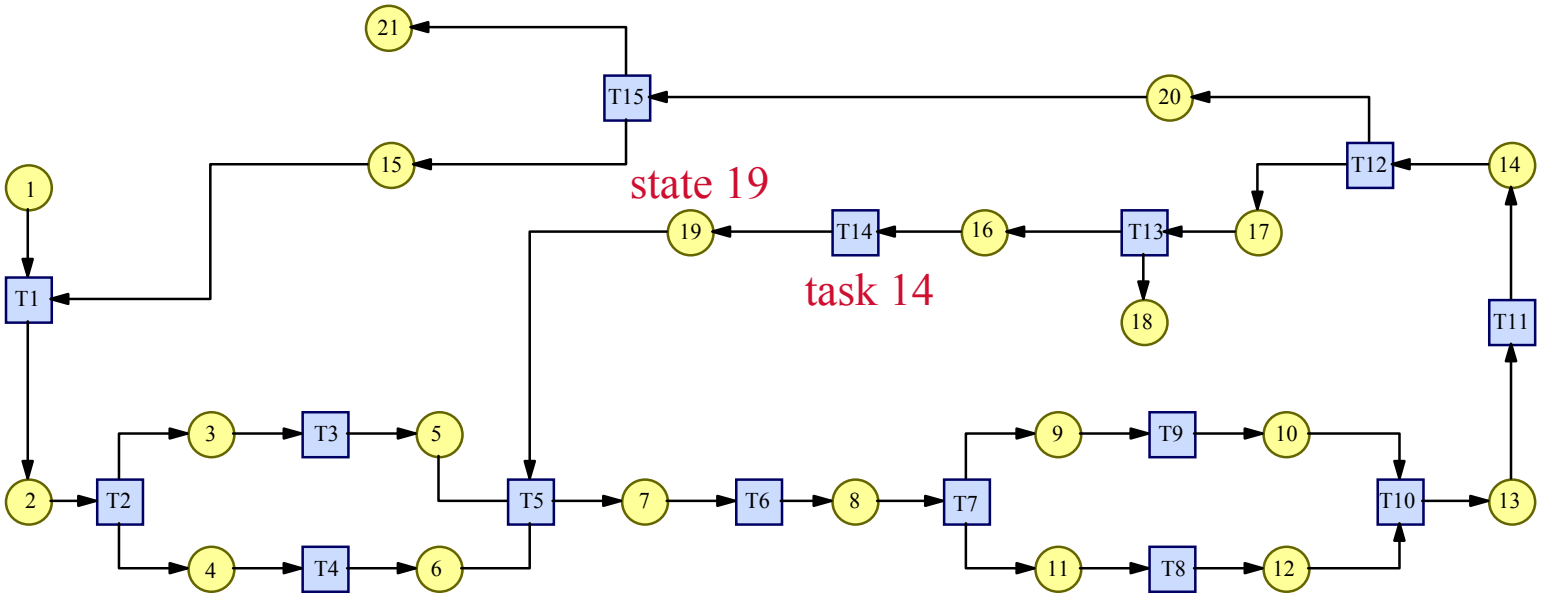

STATES:

1- A Raw, V, Low P
2- A mixed, V, Low P
3- A mixed, V,Low P to T3
4- A mixed, V,Low P to T4
5- A,V, High P form T3
6- A, V, High P form T4
7- A, V,High P, to preheat
8- A,V High P, High T
9- A ,V to packed reactor
10- A+B, V to mixer T10
11- A, V , to PFR
12- A+B, V to mixer T10
13- A+B, V to cooler
14- A+B, L to flash.
15- A+B, Rich in A, V, from purge splitter
16- A,V, low P
17- A+B, L, to distillation
18- B, L, Final Product
19- A, V, High P
20- A+B, V to purge
21- A+B, V, waste product

TASKS:

1- Mix recirc A and raw A
2- Split feed mixture
3- Compress in single stage
4- Compress in two stages
5- Mix compressed streams and recycle.
6- Preheat for reaction
7- Split to reactors
8- React A->B in the vapor phase in PFR
9- React A->B in vapor phase with catalizer C in packed reactor
10- Mix reactor outlets, Vapor
11- Condense stream
12- Flash A+B: A+B vapor, B liquid
13- Distillate A+B: A liquid, B liquid
14- Compress col. vapor outlet
15- Purge vapor stream

OTOE Assignment for STN

- Predetermined Equipment Assignment: **O**ne **T**ask **O**ne **E**quipment

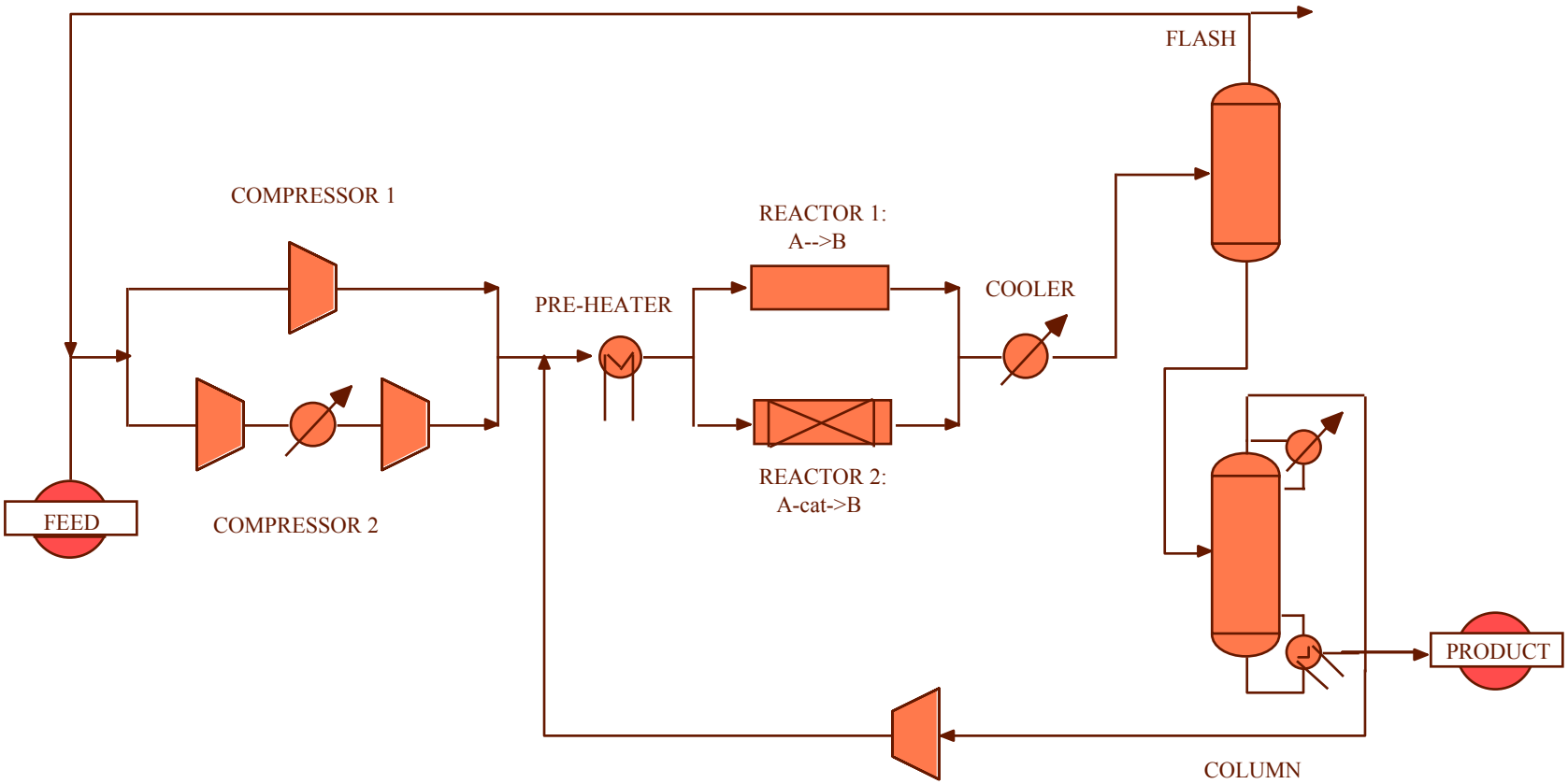

VTE Assignment for STN

- Assignment left over for optimization: **V**ariable **T**ask **E**quipment

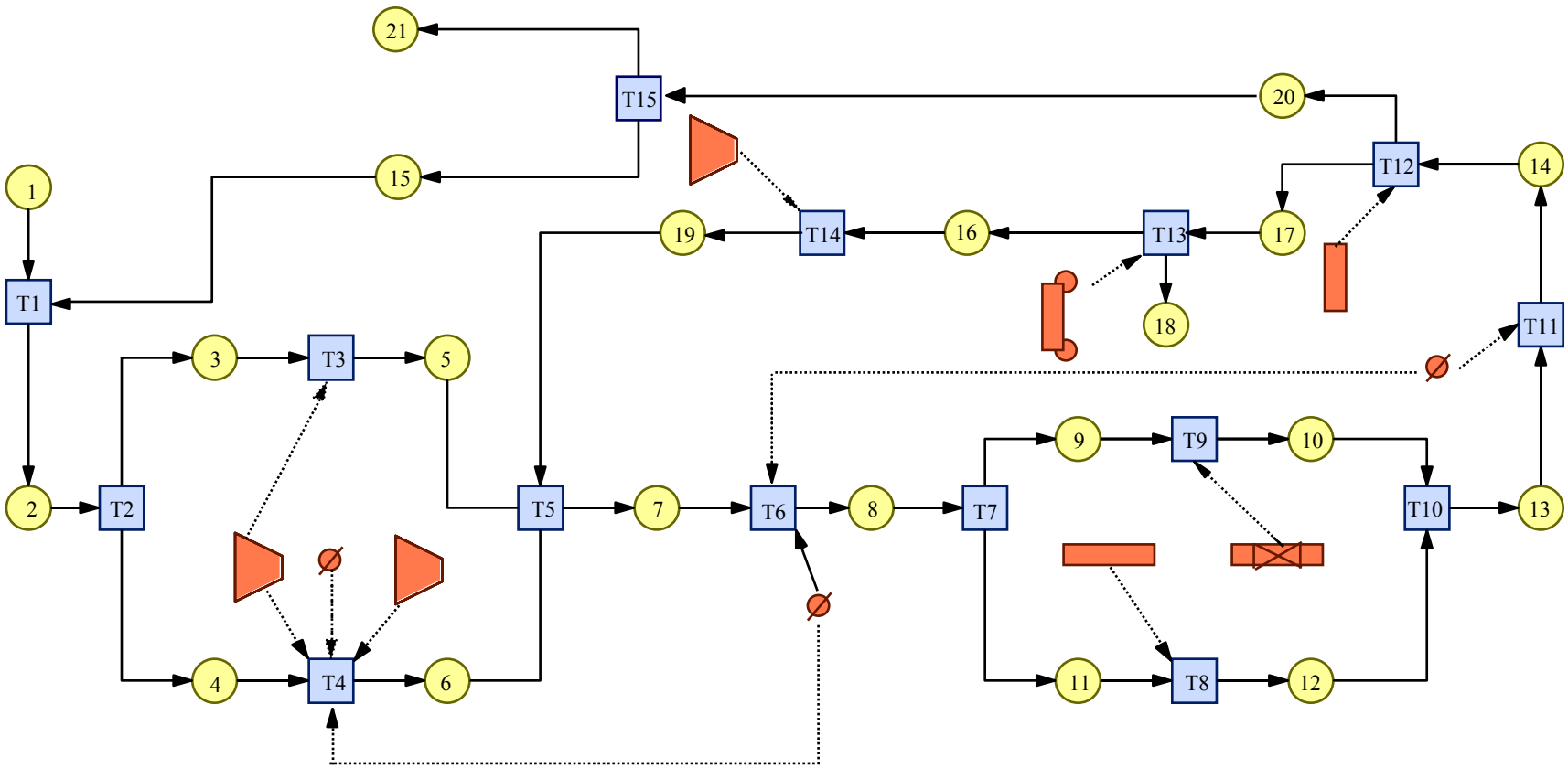

State Equipment Network (SEN)

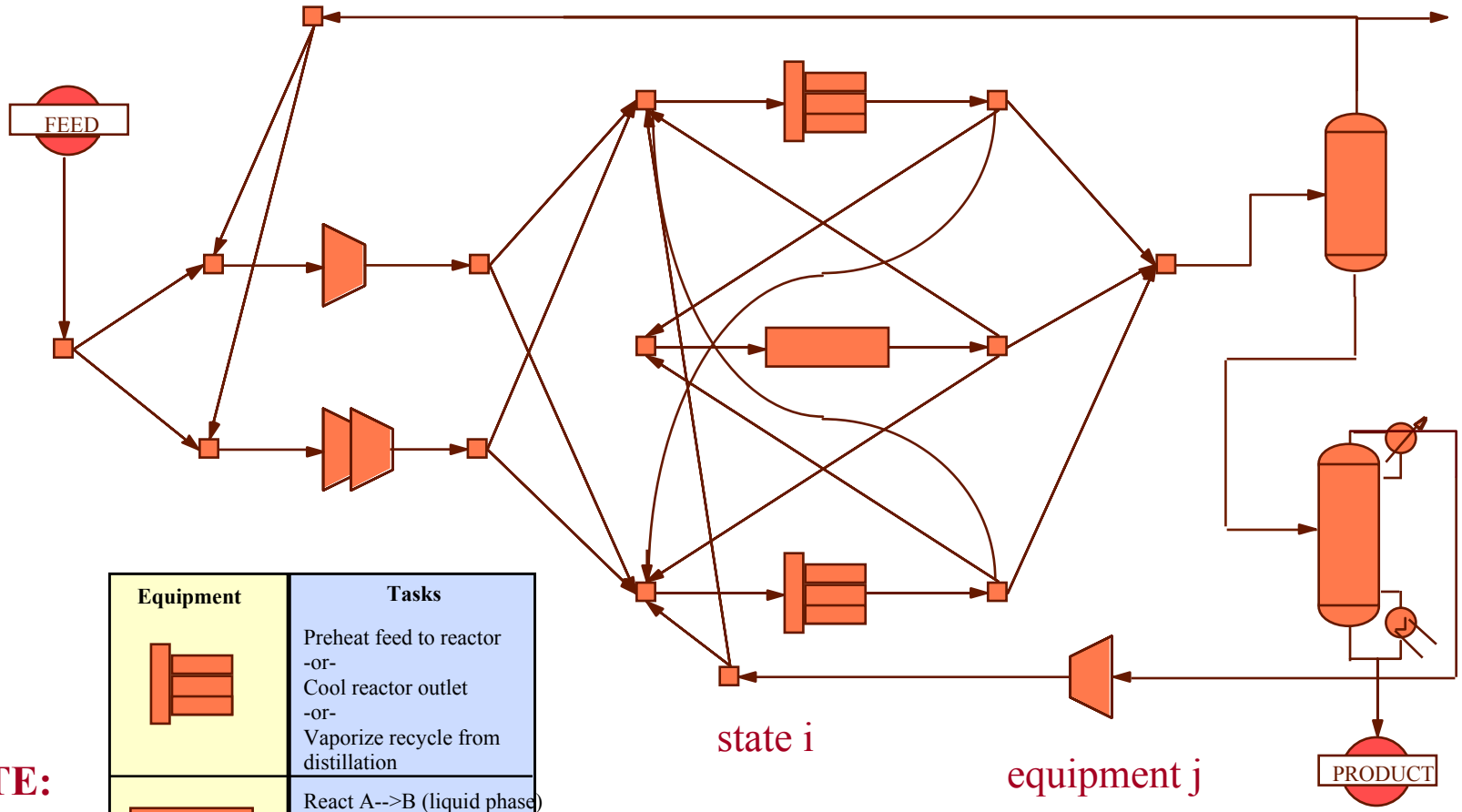

VTE:

Equipment	Tasks
	Preheat feed to reactor -or- Cool reactor outlet -or- Vaporize recycle from distillation
	React A-->B (liquid phase) -or- React A-cat->B in packed reactor (vapor phase)
1 stage 2 stage 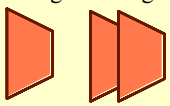	Compress Recycle -or- Compress Feed

Carnegie Mellon

GDP Model for State Task Network / OTOE

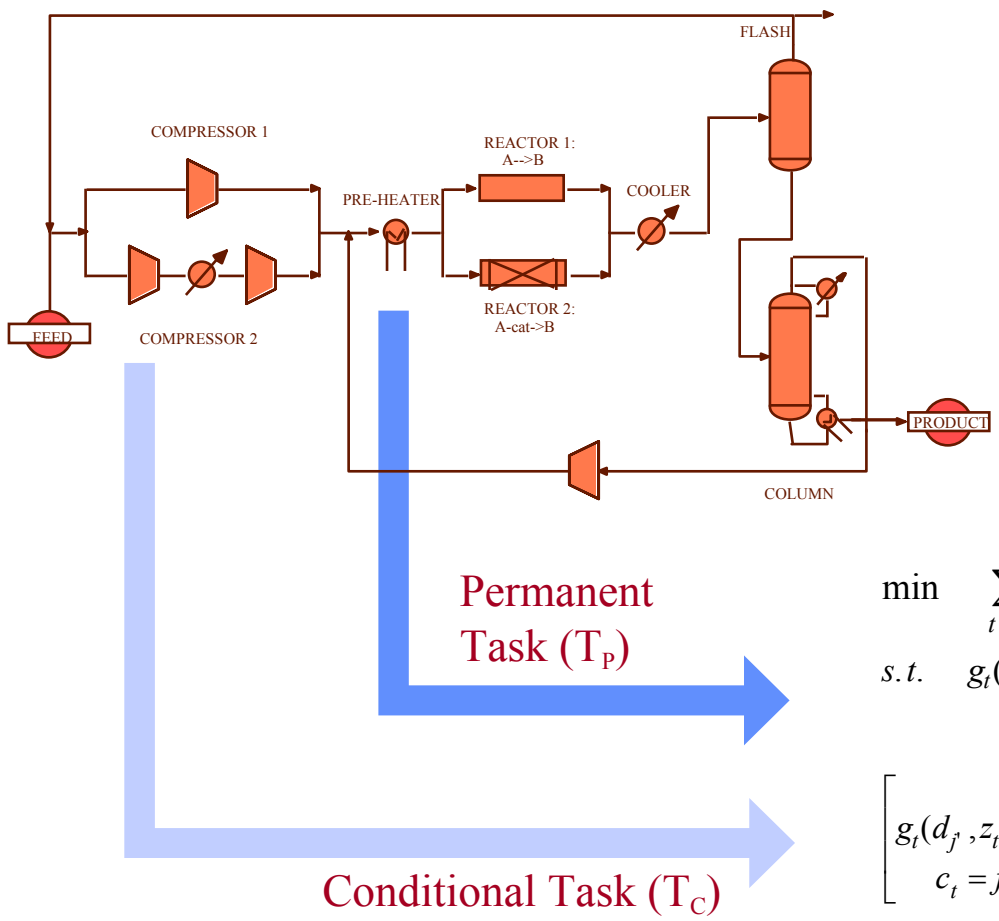

- Boolean Variable Y_t:
  - True- Task exists, task and equipment equations apply
  - False- Equipment does not exist. A subset of variables is set to zero.

$$\min \quad \sum_{t \in T} c_t + \sum_{s \in S} \alpha_s x_s$$

$$s.t. \quad \left.\begin{array}{l} g_t(d_{j'}, z_t, x_s, x_{s'}) \le 0 \\ c_t = f(d_{j'}, z_t) \end{array}\right\} \begin{array}{ll} j' \in Q_t, & t \in T_P \\ s \in I_t, & s' \in O_t \end{array}$$

$$\left[\begin{array}{c} Y_t \\ \left.\begin{array}{l} g_t(d_{j'}, z_t, x_s, x_{s'}) \le 0 \\ c_t = f(d_{j'}, z_t) \end{array}\right\} \begin{array}{l} j' \in Q_t \\ s \in I_t, s' \in O_t \end{array} \end{array}\right] \vee \left[\begin{array}{c} \neg Y_t \\ \left.\begin{array}{l} d_{j'} = z_t = 0 \\ x_s = x_{s'} = 0 \end{array}\right\} \begin{array}{l} j' \in Q_t \\ \forall s \in I_t, s' \in O_t \end{array} \end{array}\right] \quad t \in T_C$$

$$\Omega(Y) = True$$

$$d \in D, z \in Z, x \in X \qquad Y_t = \{True, False\}$$

GDP Model for SEN

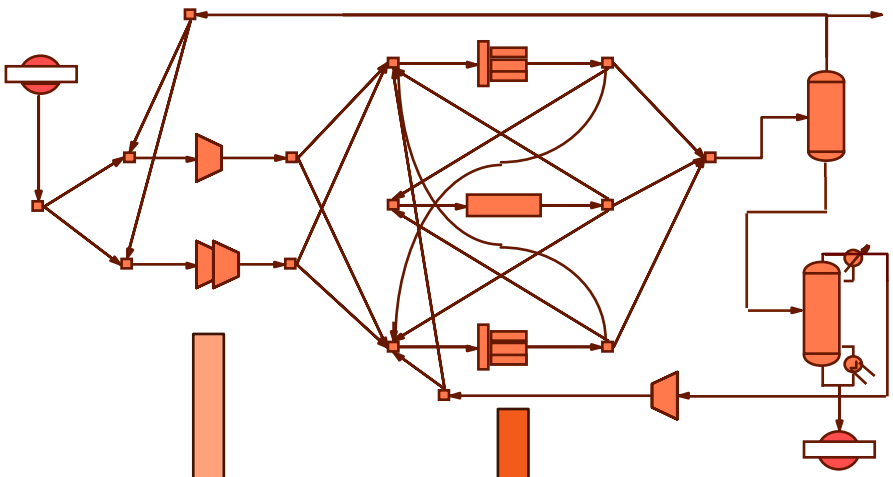

Permanent Equipment (E_P)

Conditional Equipment (E_C)

- Boolean U_j for equipment existence.
- Boolean Variable V_{jt}:
  - True- Apply design equations for task t.
  - False- Do not apply design equations for task t.

$$\min \quad \sum_{j \in E} \sum_{t \in T} c_{jt} + \sum_{s \in S} \alpha_s x_s$$

$$s.t. \quad \bigvee_{t \in B_j} \begin{bmatrix} V_{jt} \\ p_{tj}(d_j, z_t, x_s, x_{s'}) \le 0 \\ c_{jt} = f(d_j, z_t) \end{bmatrix} \qquad j \in E_P$$

$$\begin{bmatrix} U_j \\ \bigvee_{t \in B_j} \begin{bmatrix} V_{jt} \\ p_{tj}(d_j, z_t, x_s, x_{s'}) \le 0 \\ c_{tj} = f(d_j, z_t) \end{bmatrix} \end{bmatrix} \vee \begin{bmatrix} \neg U_j \\ z_t = d_j = 0 \\ x_s = x_{s'} = 0 \end{bmatrix} \qquad j \in E_C$$

$$\Omega(V, U) = True$$

$$d \in D, z \in Z, x \in X, \qquad V_{jt} = \{True, False\}, U_j = \{True, False\}$$

Theoretical Properties

- Model comparison (STN vs. SEN):
  - One Task - One Equipment assignments lead to simpler disjunctive models
  - SEN is equivalent to STN / OTOE if each equipment is allowed to perform only one task, provided same tasks appear in both
  - STN / VTE leads to different model than SEN. The same problem and same assignment (VTE) generate physically different superstructures
  - No model is inherently tighter than the other.

Flowsheet Synthesis: MINLP Approach (OTOE)

HDA process: 13 0-1 variables, 723 variables, 719 constraints DICOPT: 7.5 secs

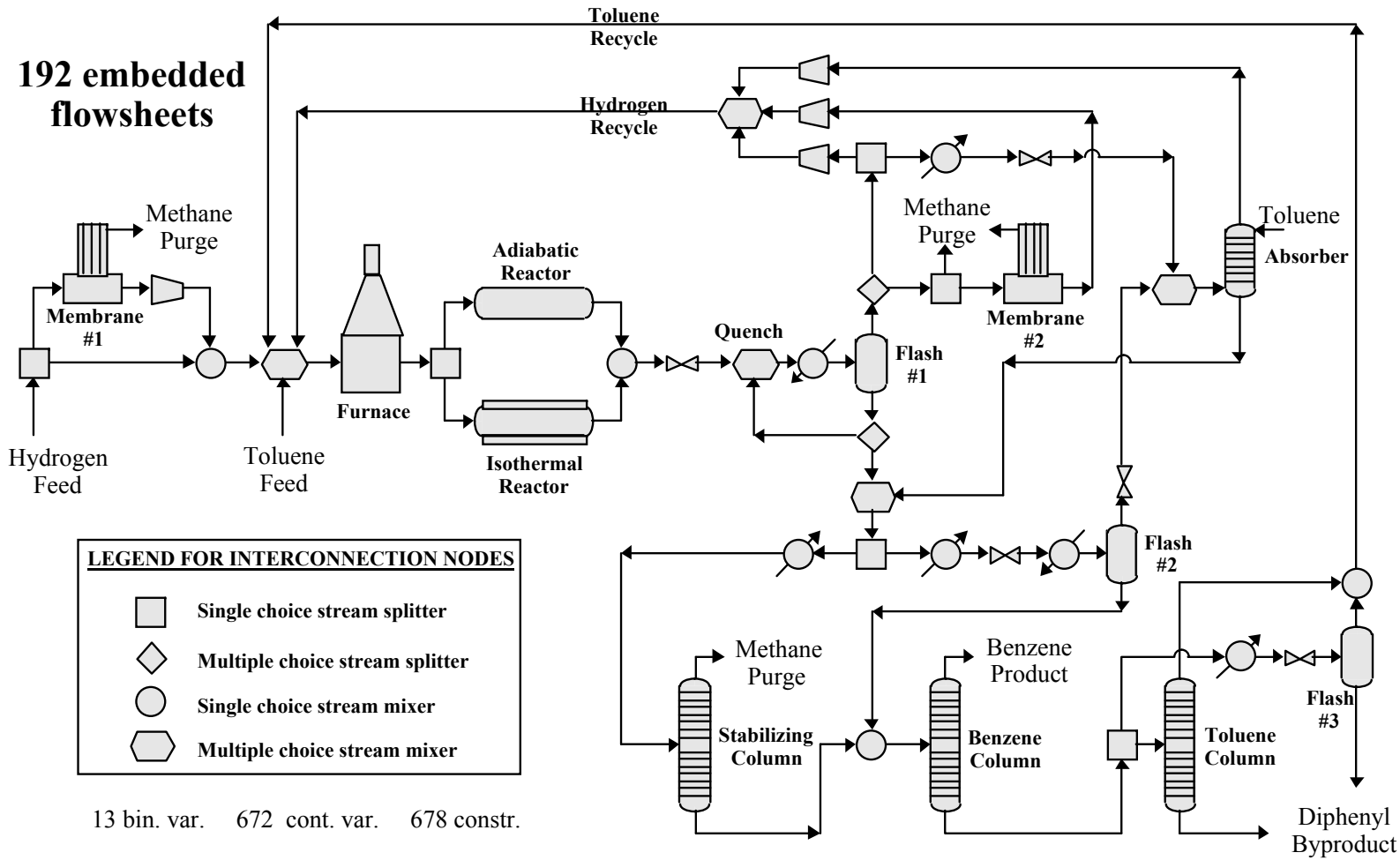

13 bin. var. 672 cont. var. 678 constr.

```
--- DICOPT: Log File:
Major Major  Objective  CPUtime Itera- Evaluation Solver
Step  Iter     Function    (Sec)   tions   Errors
 NLP   1     5750.63780    1.81    2490     0     snopt
 MIP   1     3312.01424    0.33     443     0     cplex
 NLP   2     4057.62731<   1.59    2038     0     snopt
 MIP   2     2227.55081    0.33     713     0     cplex
 NLP   3     4047.47058    3.50    2222     0     snopt
--- DICOPT: Terminating...
--- DICOPT: Stopped on NLP worsening
```

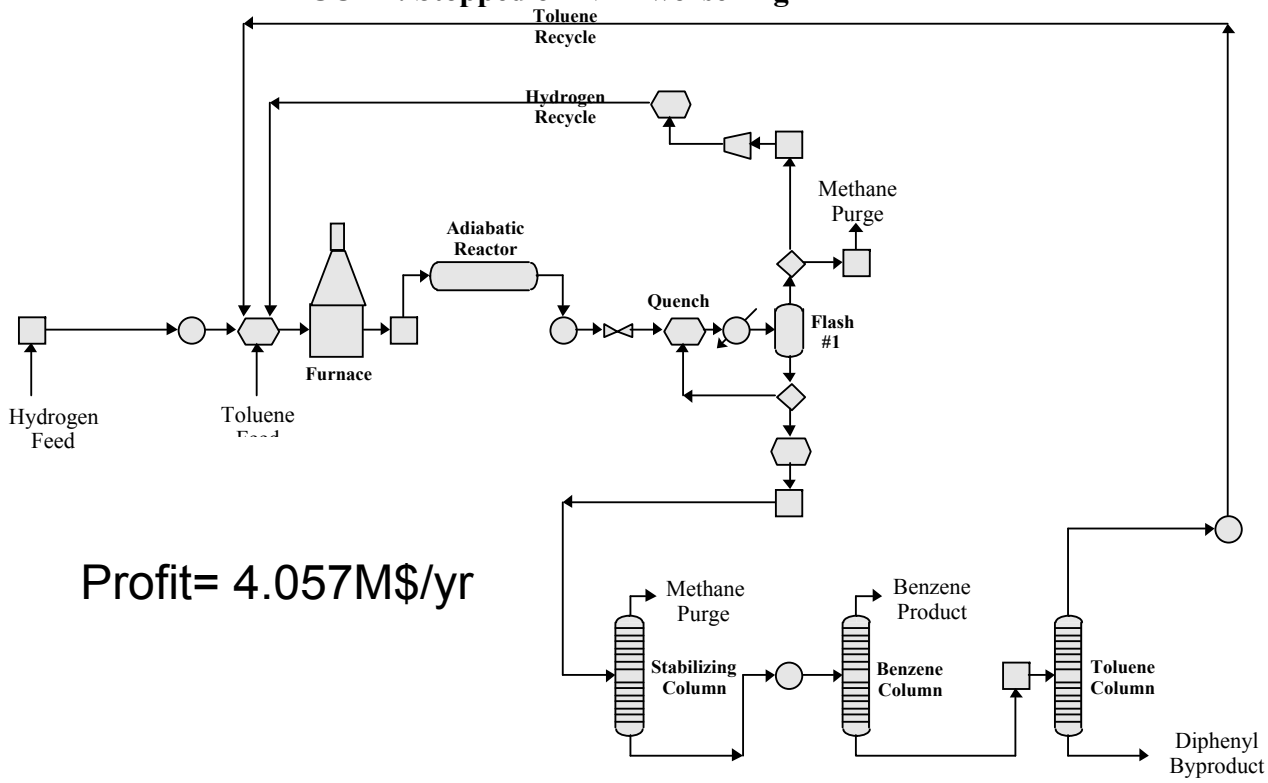

Profit= 4.057M$/yr

Potential Problems:

1. **Zero flows**
2. **Large dimensionality**

Logic-based OA Algorithm

Turkay, Grossmann (1996)

Basic idea: solve NLPs with only existing parts flowsheet

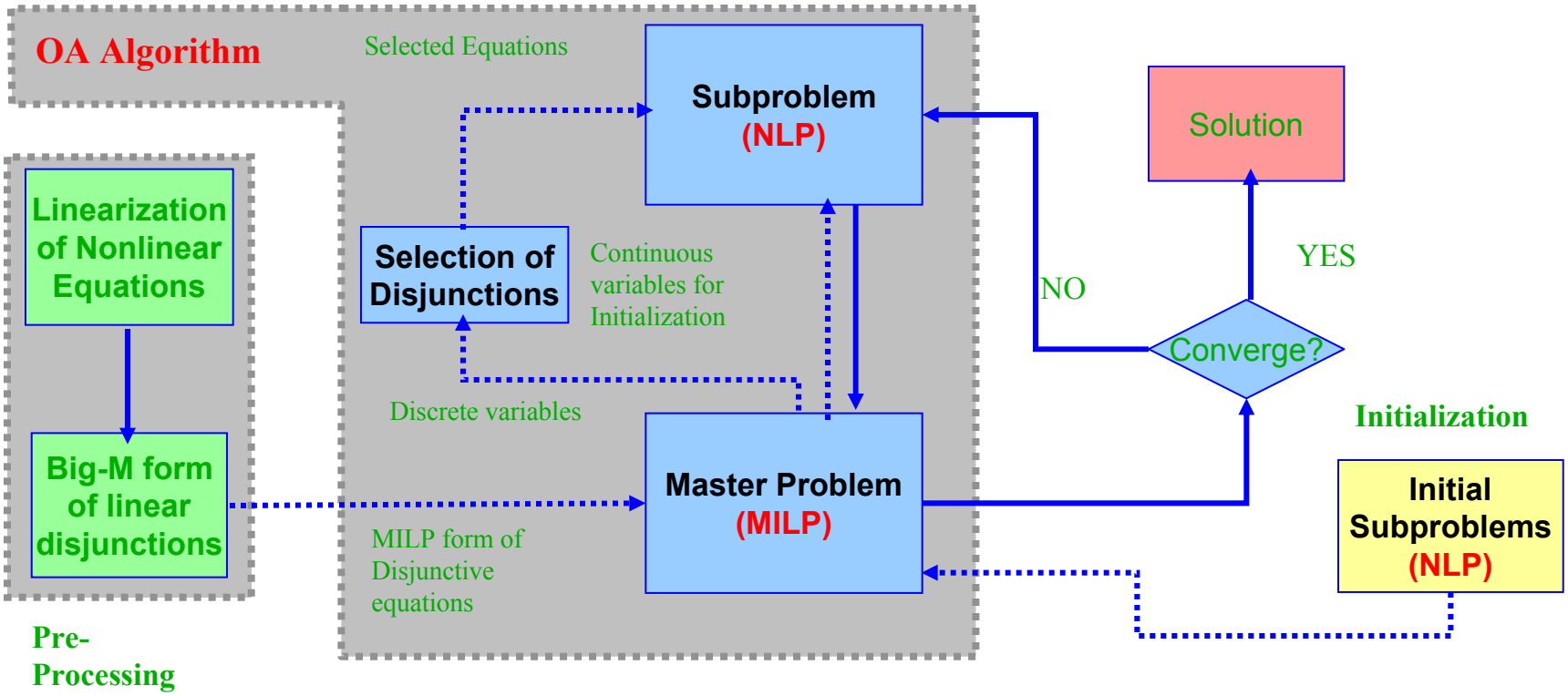

Data flow Algorithm cycle

Implemented in GAMS-LOGMIP

Example Superstructure Process Flowsheet

(OTOE)

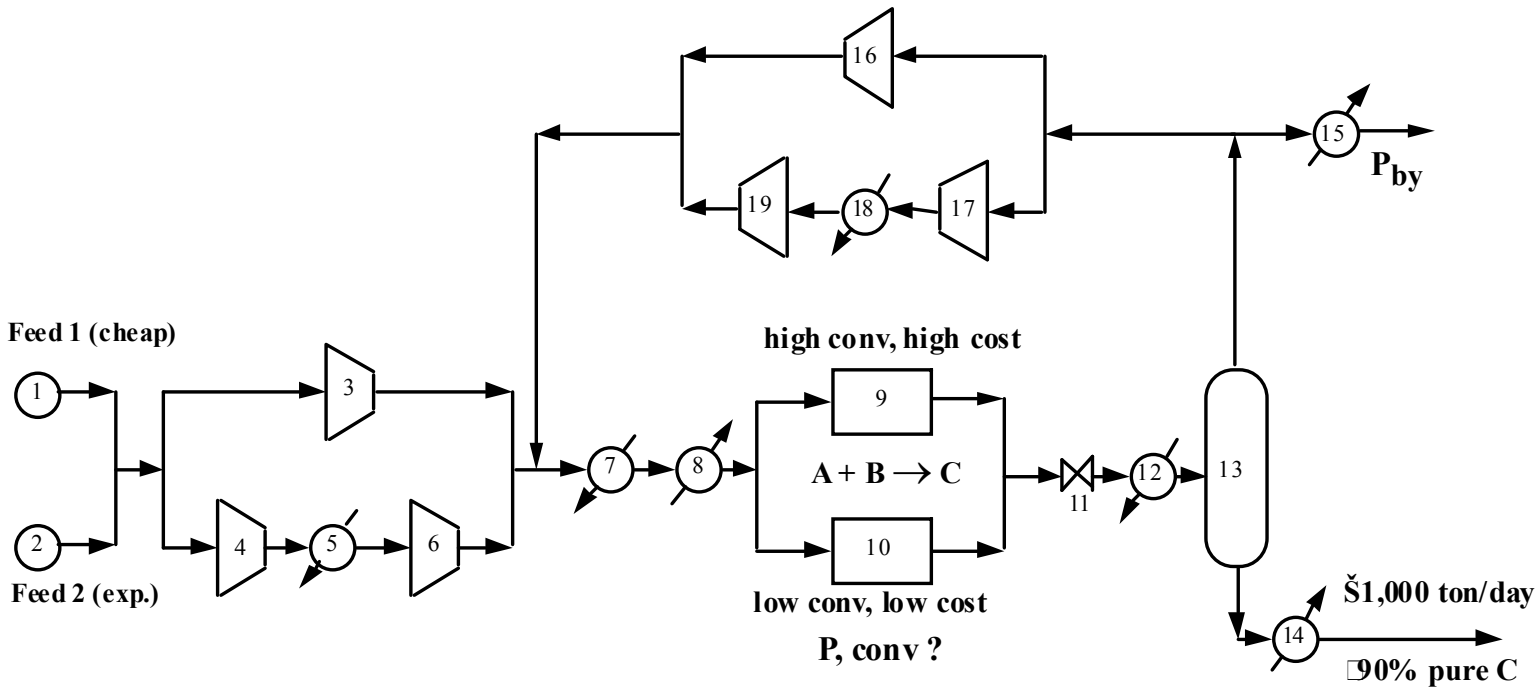

To apply Logic-based OA we require NLP subproblems to cover all units

Remark. Fewest number subproblems: set covering problem

Subproblem 1 (NLP): $859,000/yr

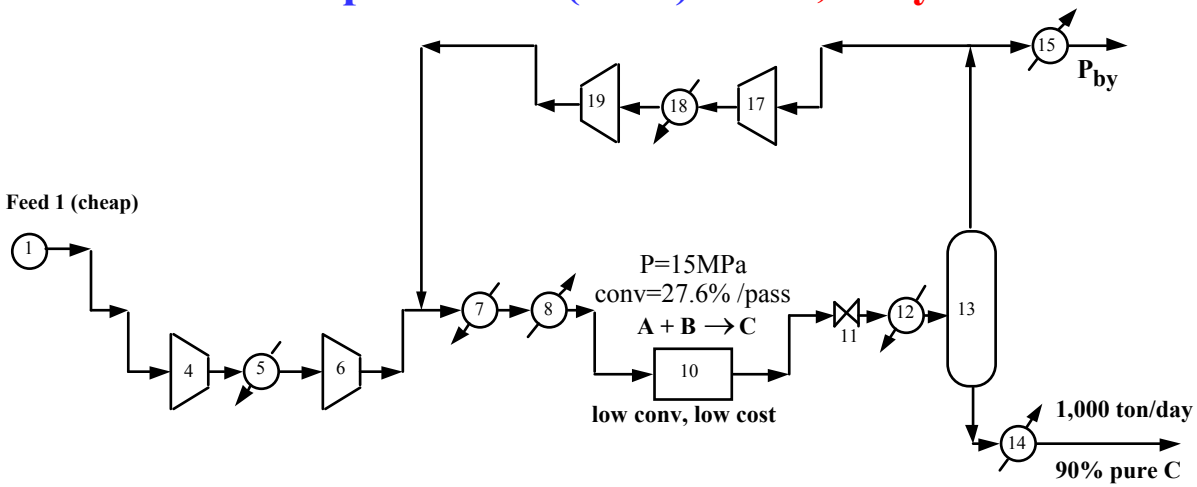

Subproblem 2 (NLP): $1,575,000/yr

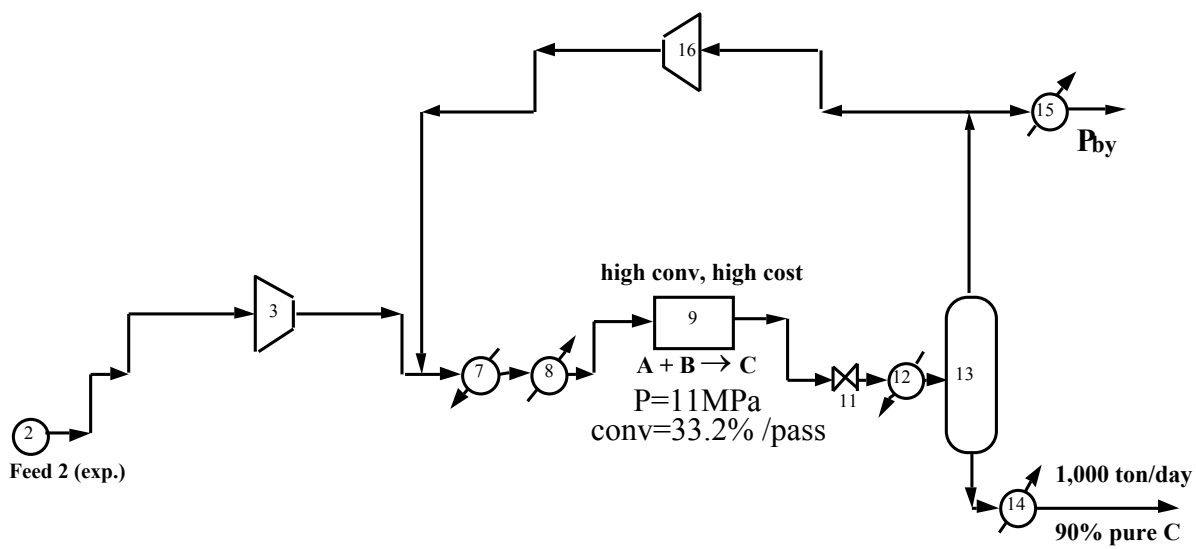

All units covered => **MILP Master 1: $1,868,000/yr**

Subproblem 3 (NLP): $1,794,000/yr

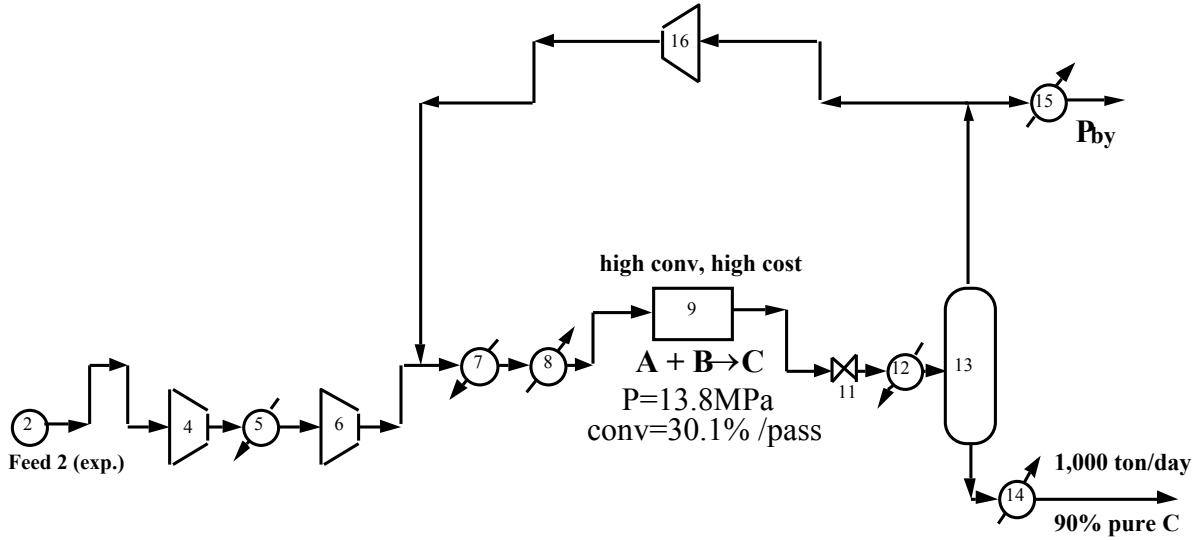

MILP Master 2: $1,741,000/yr (with integer cut)

Since **$1,741,000/yr < $1,794,000/yr STOP!**

Process Flowsheet Synthesis

Superstructure Vinyl Chloride Monomer *(Turkay & Grossmann, 1997)*

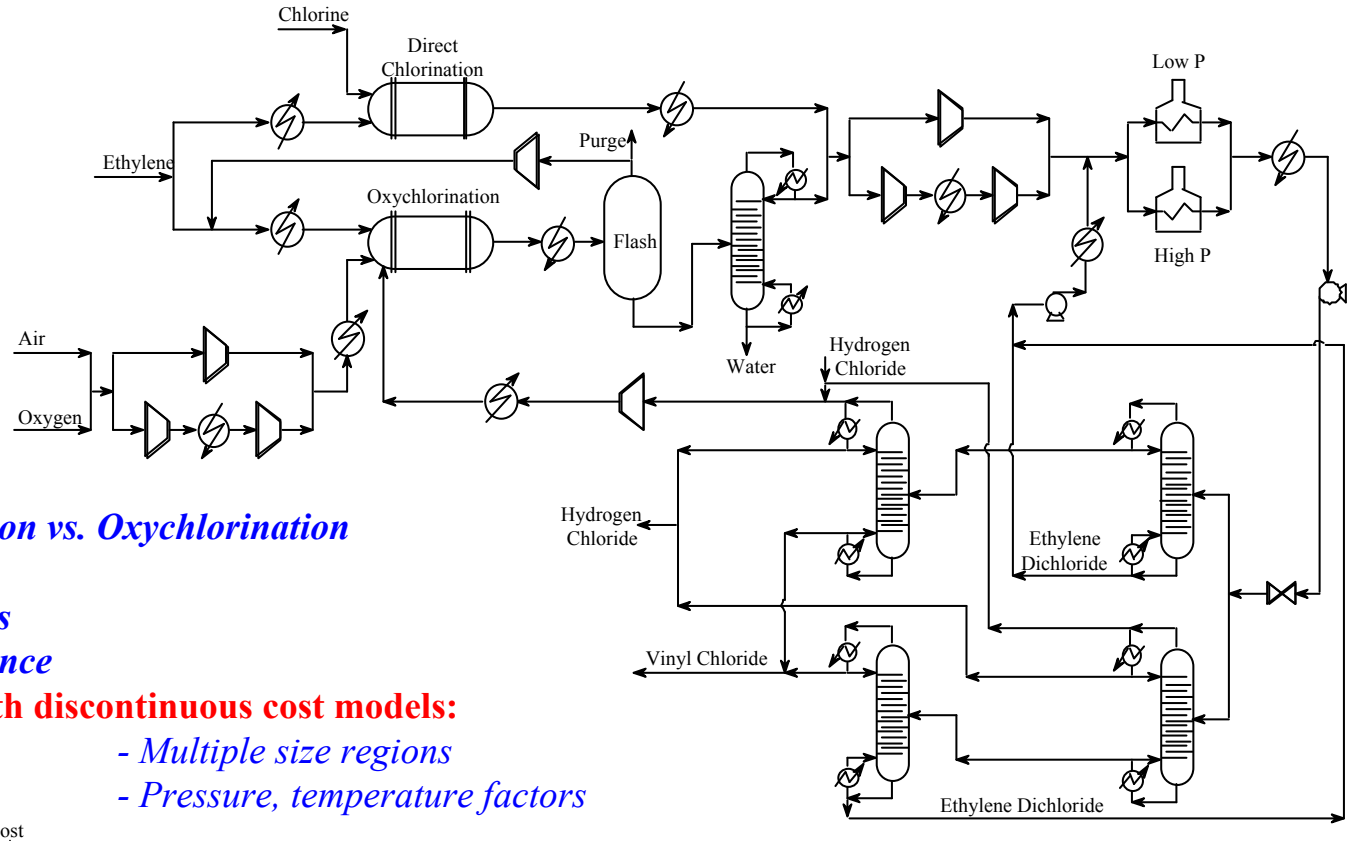

Major options:

Direct Chlorination vs. Oxychlorination

Air vs. Oxygen

Pressure Pyrolisis

Separation sequence

Optimization with discontinuous cost models:

- Multiple size regions

- Pressure, temperature factors

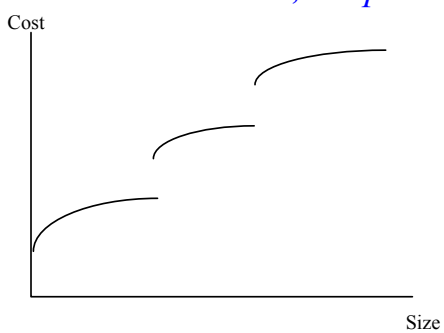

Optimal Solution *(CPU-time: 3.8min)*

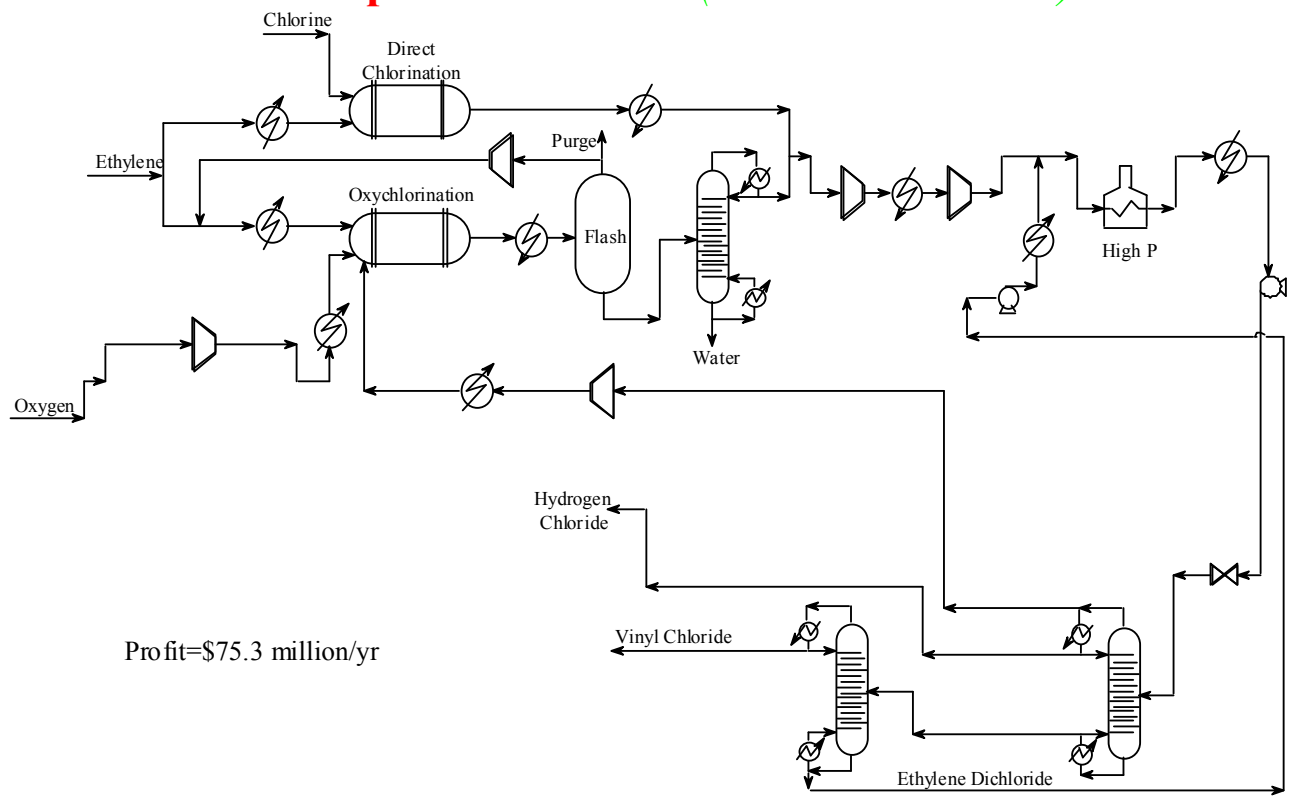

Profit=$75.3 million/yr

Item	Flowsheet 1	Flowsheet 2	Master Pr. 1	Flowsheet 3	Master Pr. 2
Binary var.	162	168	259	168	259
Continuous var.	879	883	1715	883	1822
Constraints	699	703	1750	703	1858
Profit ($M/yr)	27.678	75.283	82.763	71.809	65.262
Major Iterations	3	3	N/A	3	N/A
CPU time (sec)	88.00	64.99	8.24	53.76	13.21

Biomass emerging as important renewable

US Energy Sources

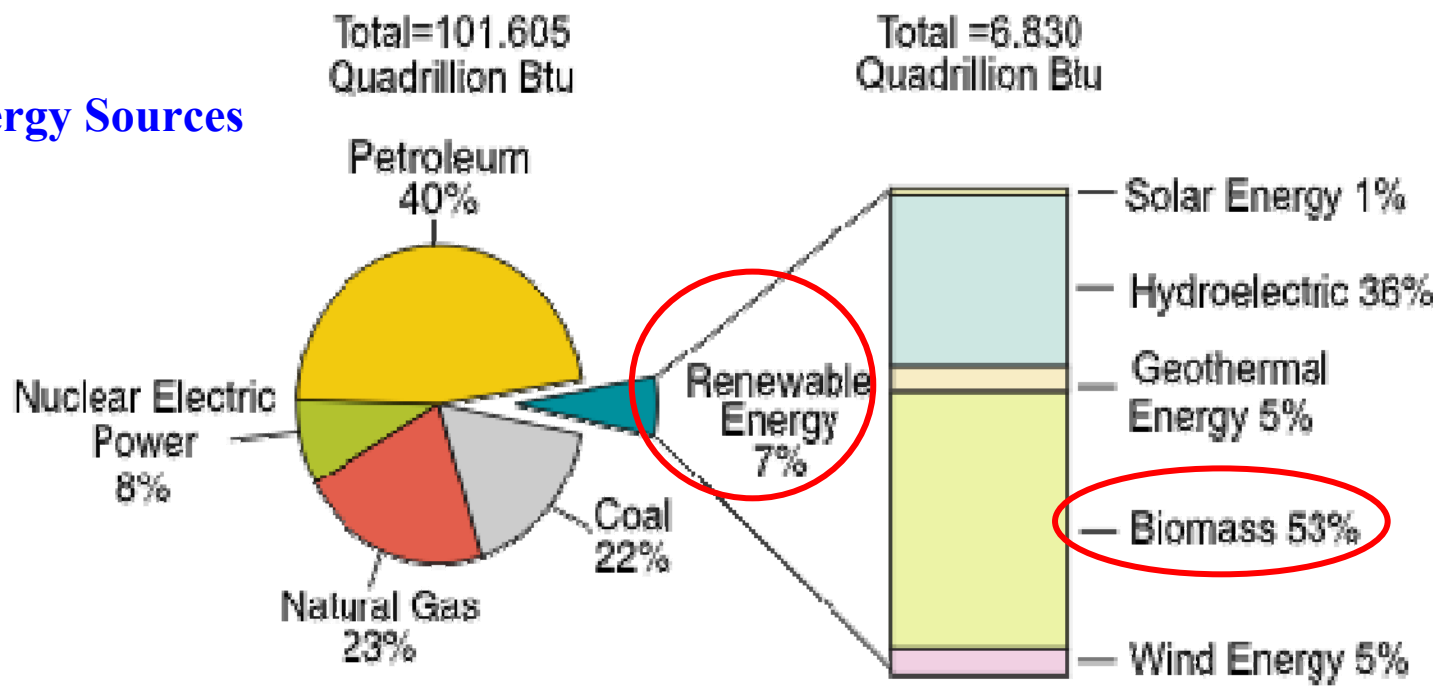

Note: Sum of components may not equal 100 percent due to independent rounding.
Source: EIA, *Renewable Energy Consumption and Electricity Preliminary 2007 Statistics*, Table 1: U.S. Energy Consumption by Energy Source, 2003-2007 (May 2008).

Process Design Challenges in Bioethanol

Energy consumption corn-based process level:

Author (year)	Energy consumption (Btu/gal)
Pimentel (2001)	75,118
Keeney and DeLuca (1992)	48,470
Wang et al. (1999)	40,850
Shapouri et al. (2002)	51,779
Wang et al (2007)	38,323

Water consumption corn based - process level:

Author (year)	Water consumption (gal/gal ethanol)
Gallager (2005) First plants	11
Philips (1998)	5.8
MATP (2008) Old plants in 2006	4.6
MATP (2008) New plants	3.4

Proposed Design Strategy for Energy and Water Optimization

Energy optimization

Issue: *fermentation reactions at modest temperatures*

=> No source of heat at high temperature as in petrochemicals

Multieffect distillation followed by heat integration process streams

Water optimization

Issue: *cost contribution is currently still very small (freshwater contribution < 0. 1%)*

=> Total cost optimization is unlikely to promote water conservation

Optimal process water networks for minimum energy consumption

Energy Optimization of Corn-based Bioethanol

Peschel, Martin, Karuppiah, Grossmann, Zullo, Martinson (2007)

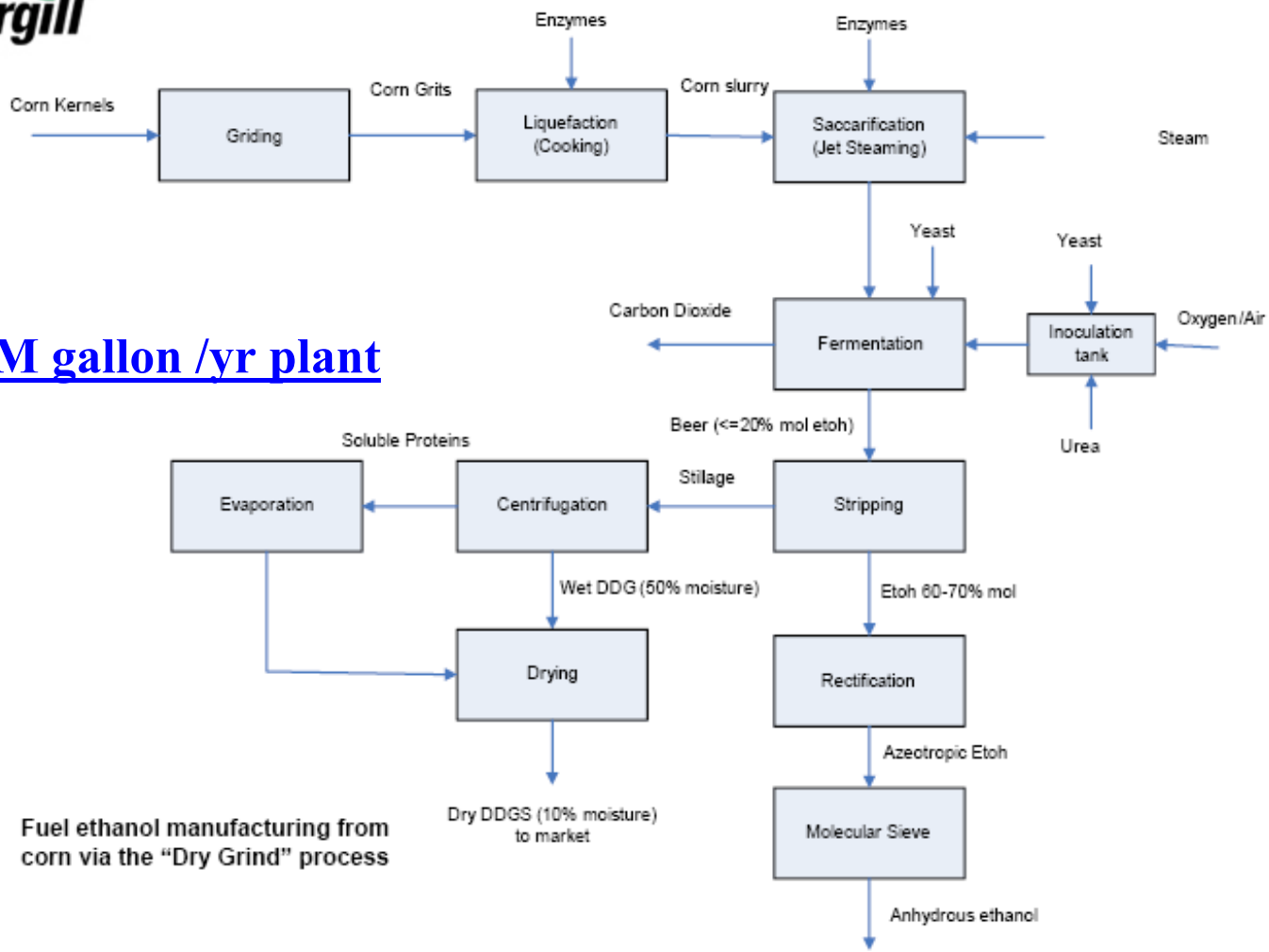

60 M gallon /yr plant

Fuel ethanol manufacturing from corn via the "Dry Grind" process

Equipment cost = M$ 18.4 **Steam cost = M$ 21/yr** **Prod. cost = 1.50 $/gal**

Superstructure of a Bio-ethanol Plant

Required operations

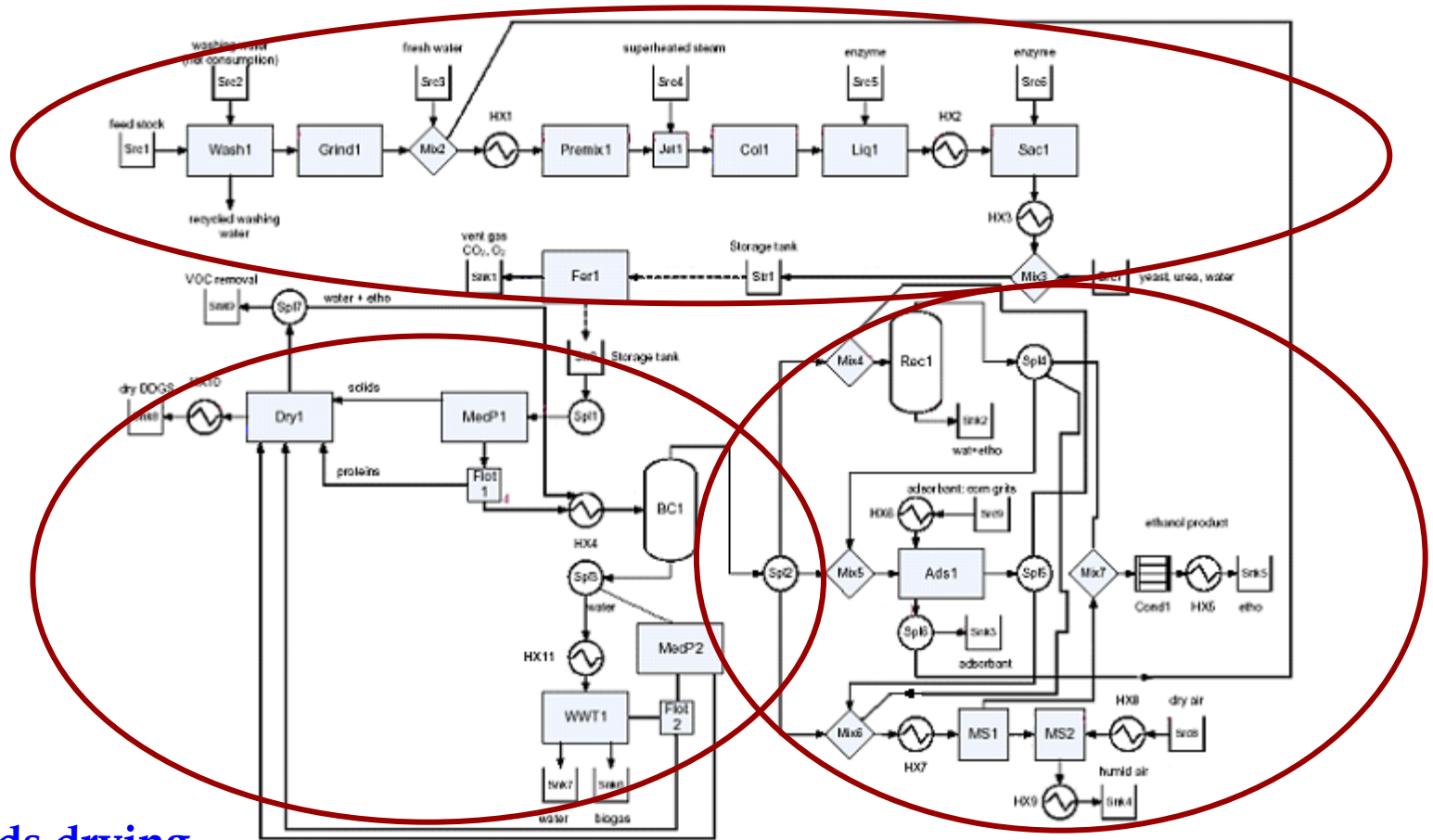

Solids drying

Mechanical press before/after Beer column

Ethanol purification

Molecular Sieves vs Corn Grits

Carnegie Mellon

Alternatives for Energy Reduction

Heat Integration process streams:

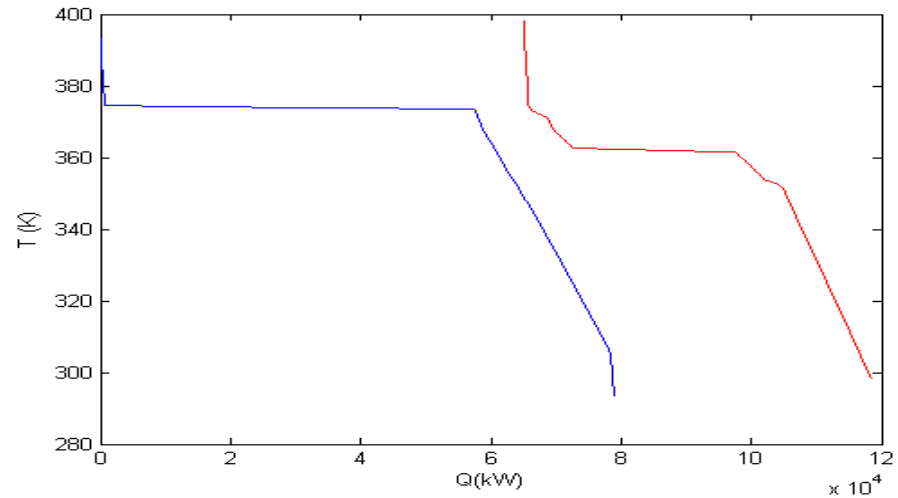

Multieffect columns:

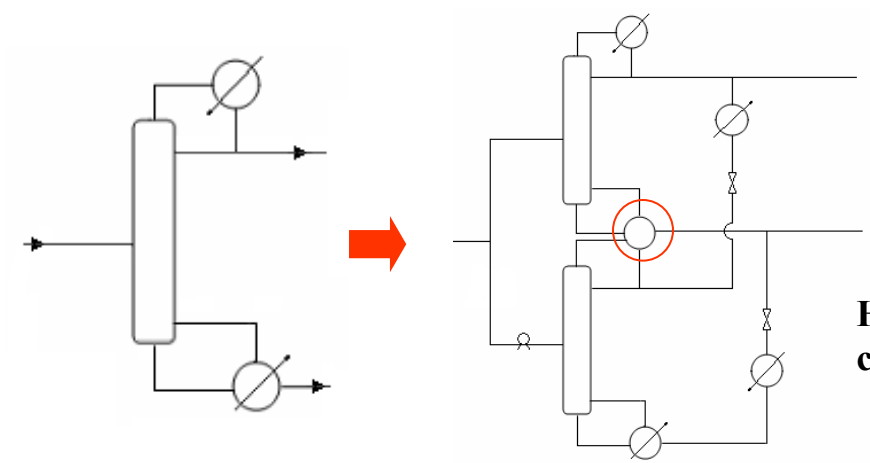

GDP model comprises mass, energy balances, design equations *(short cut)*

2,922 variables (2 Boolean) 2,231 constraints

Optimized Structure

60 M gallon /yr plant

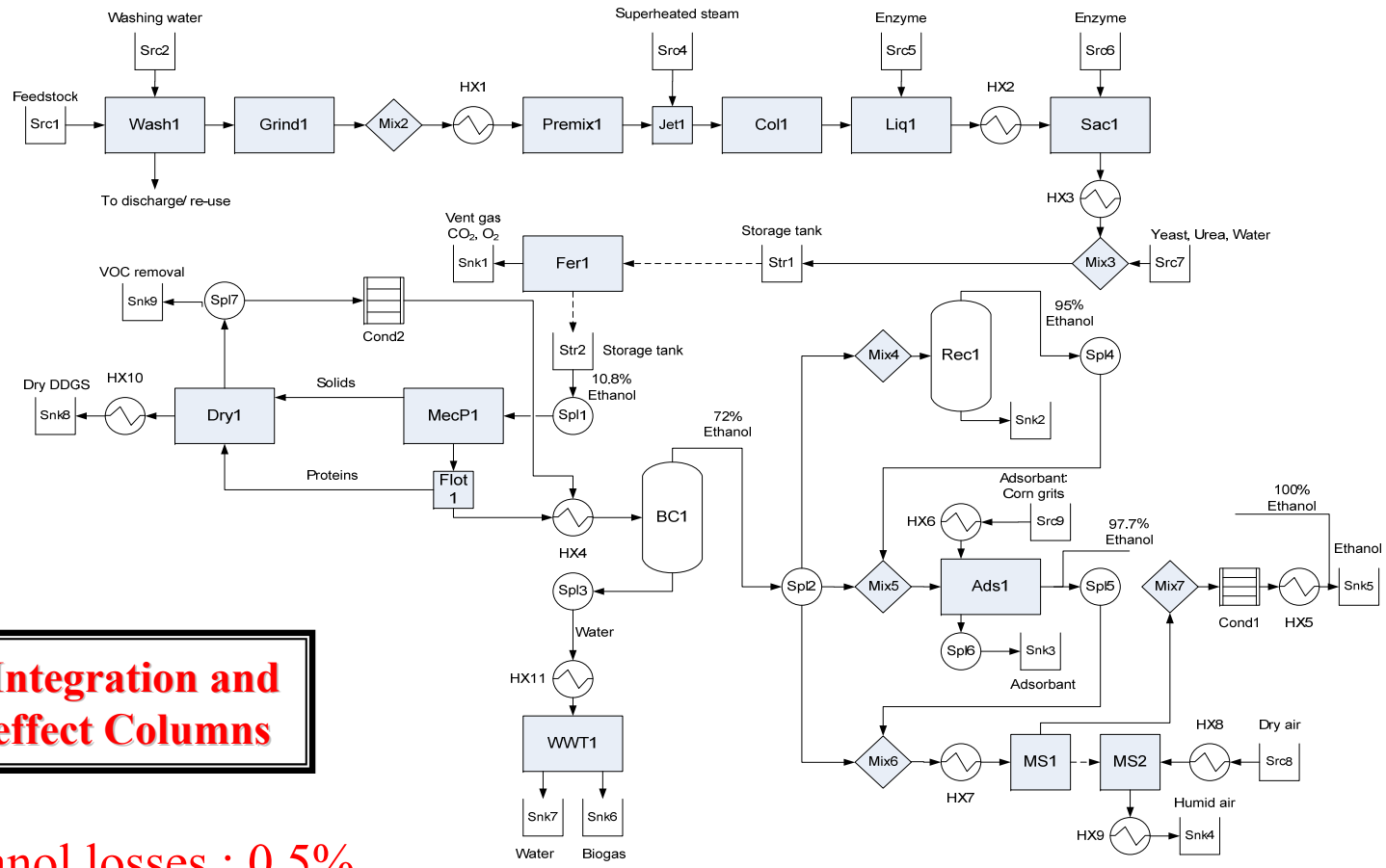

Heat Integration and Multieffect Columns

Ethanol losses : 0.5%

Equipment cost = **M$ 20.7**

Steam cost = **M$ 7.1/yr (-66%)**

Prod. cost = 1.28 **$/gal**

Reduction from $1.50/gal (base case) to $1.28/gal !

Carnegie Mellon

Energy Profiles in Multieffect Columns

Beer Column

Single column

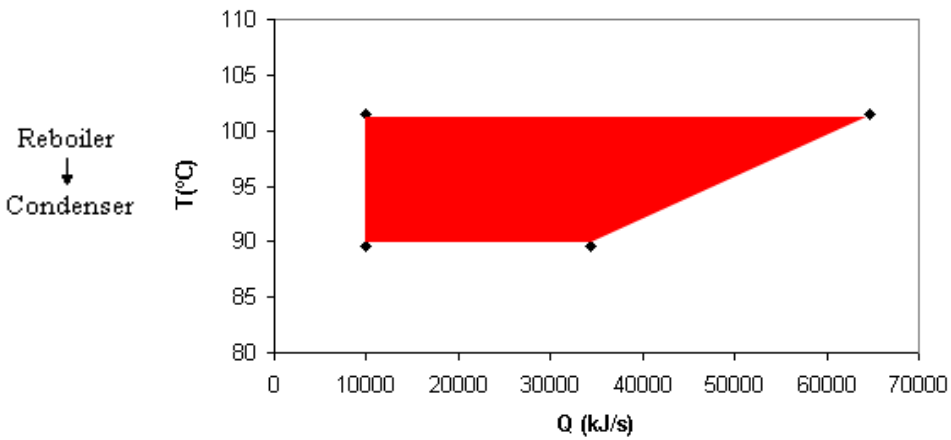

Triple effect column

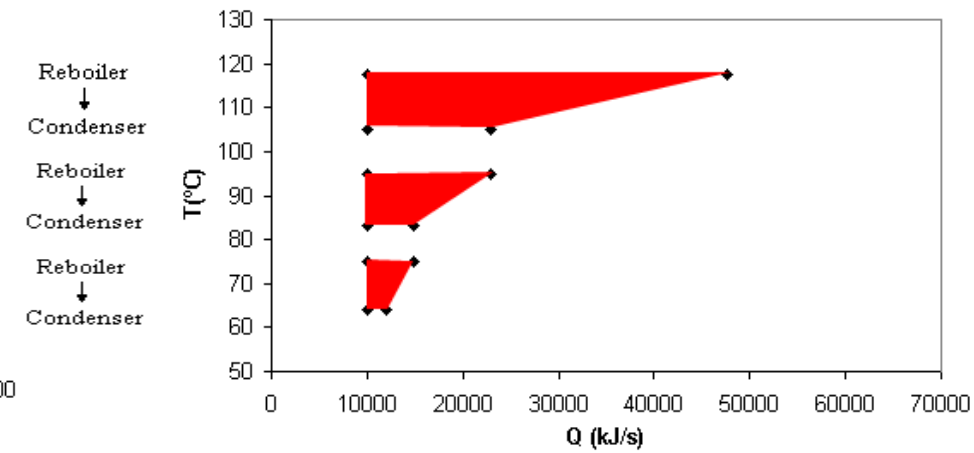

Rectification Column

Single column

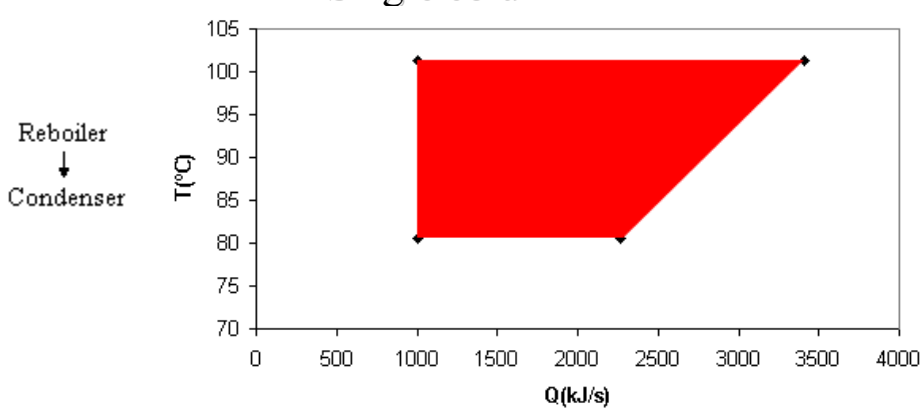

Double effect column

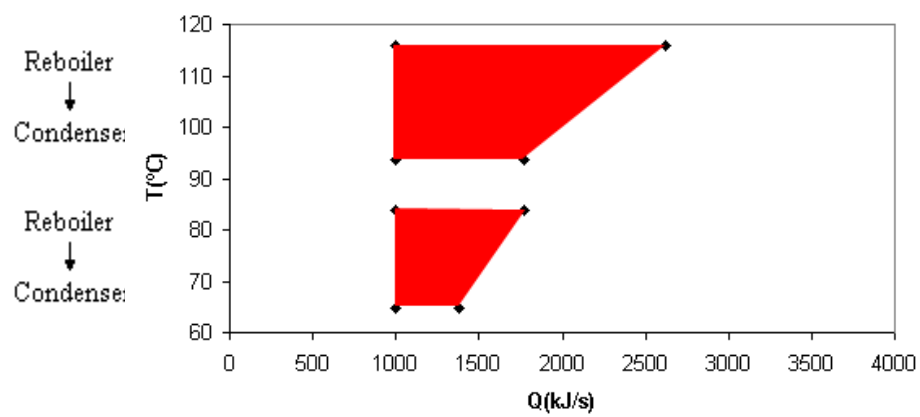

Carnegie Mellon

Remarks

Current ethanol from corn and sugar cane and biodiesel from vegetable oils compete with the food chain.

U.S. Government policies support the production of lignocellulosic based biofuels and the reuse of wastes and new sources (algae)

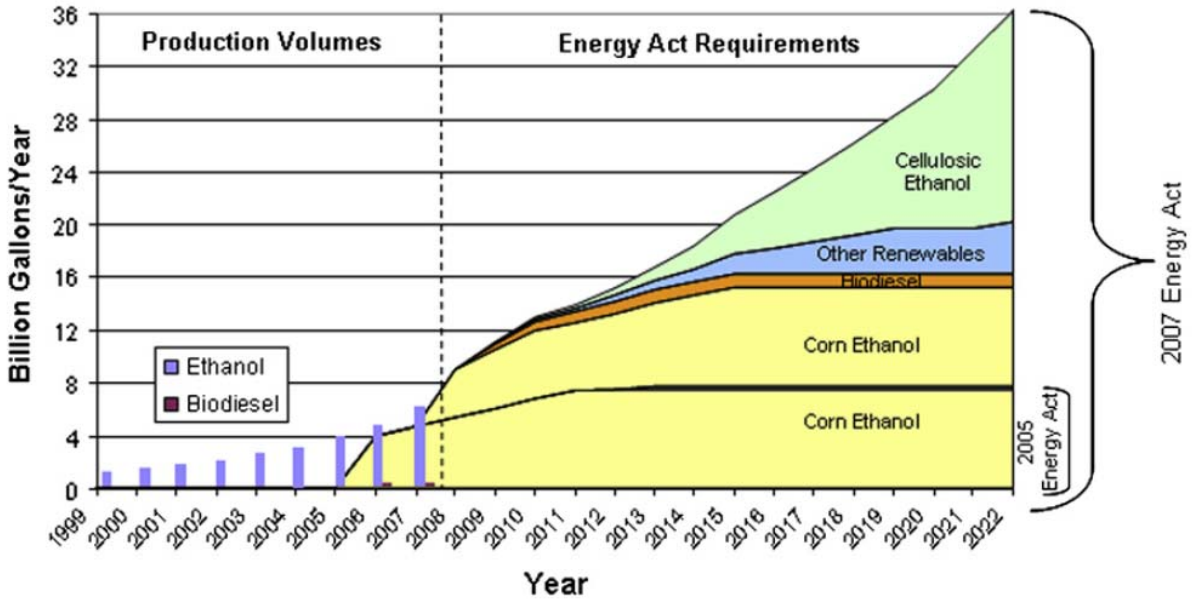

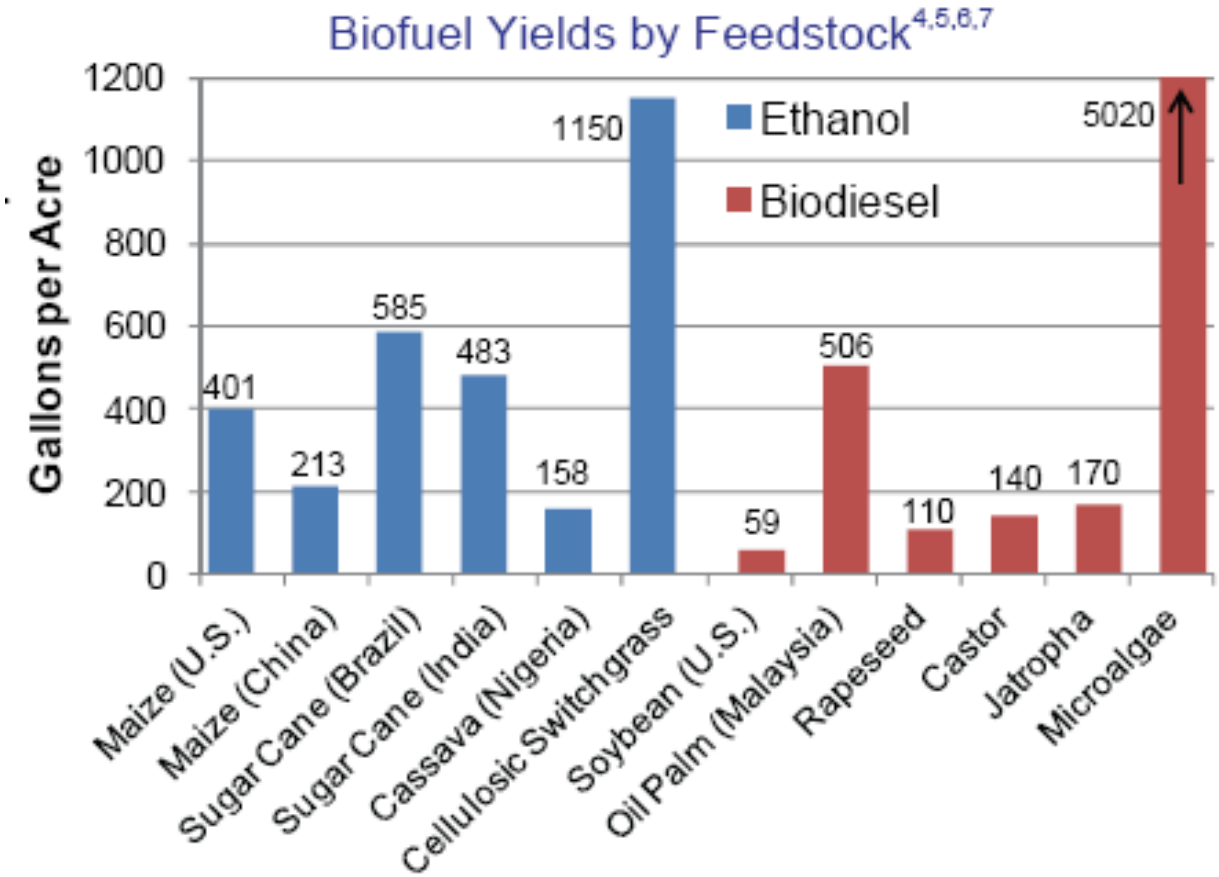

Cellulosic Switchgrass and Microalgae highest yield (gal/acre)

Note: Switchgrass almost 3 times yield than Corn

Lignocellulosic Bioethanol

a) Thermochemical Process *(gasification)*

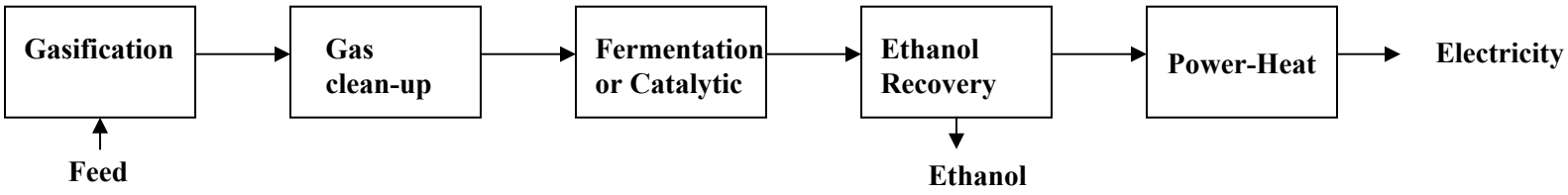

b) Hydrolysis Process *(fermentation)*

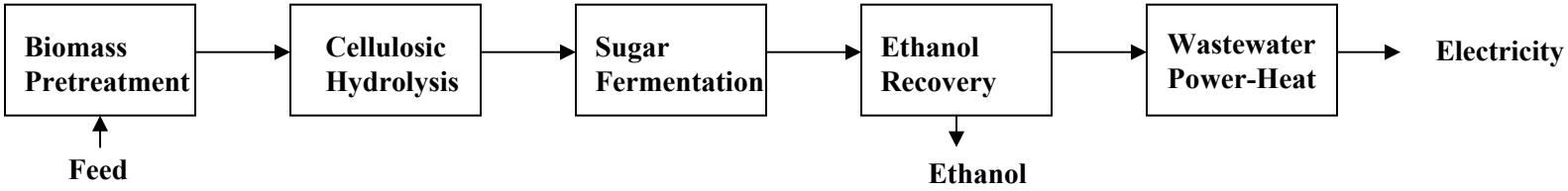

Challenge:

<u>Many alternative flowsheets</u>

Superstructure Thermochemical Bioethanol

Martin, Grossmann (2010)

Ethanol via gasification

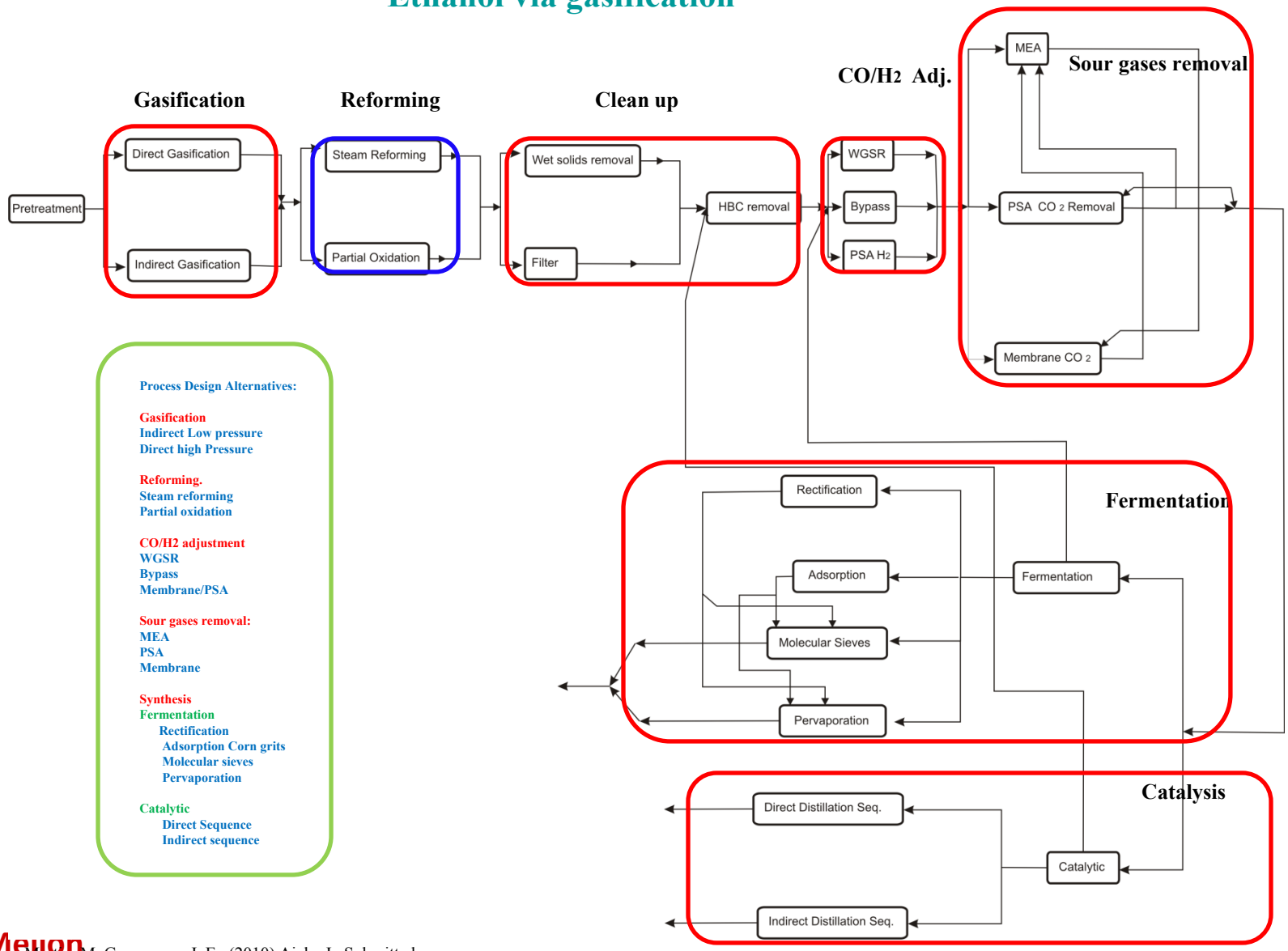

Process Design Alternatives:

Gasification
- Indirect Low pressure
- Direct high Pressure

Reforming.
- Steam reforming
- Partial oxidation

CO/H2 adjustment
- WGSR
- Bypass
- Membrane/PSA

Sour gases removal:
- MEA
- PSA
- Membrane

Synthesis

Fermentation
- Rectification
  - Adsorption Corn grits
  - Molecular sieves
  - Pervaporation

Catalytic
- Direct Sequence
- Indirect sequence

Carnegie Mellon

Martin, M. Grossmann, I. E (2010) Aiche J. Submitted

Solution Strategy Energy Optimization

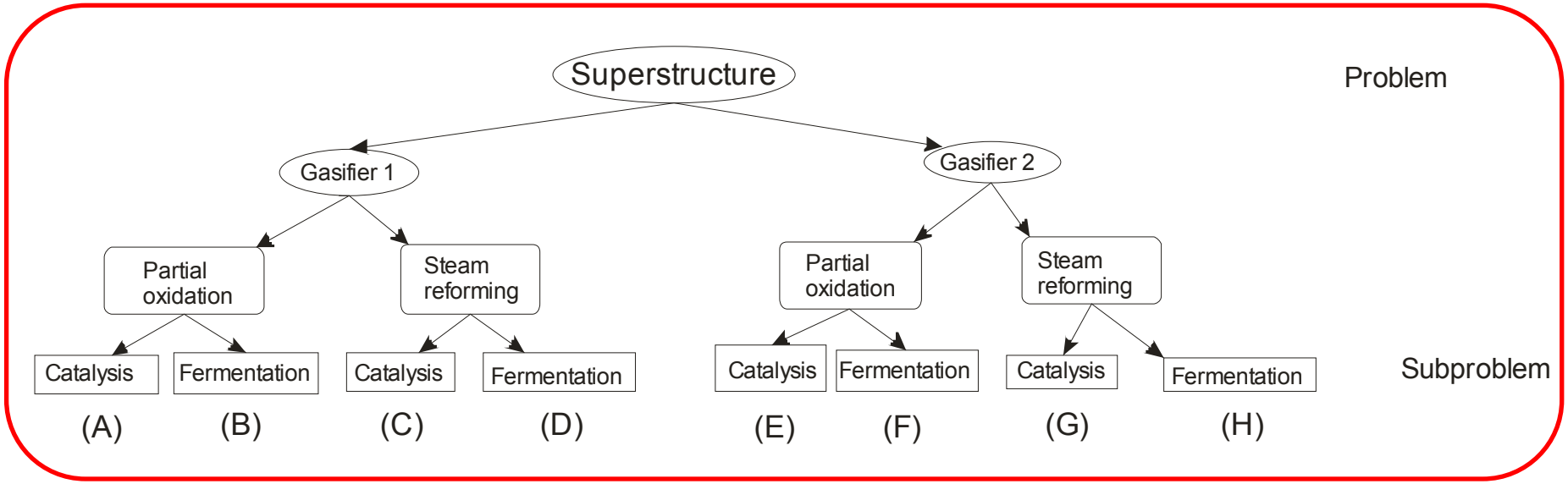

Decomposition of GDP in 8 subproblems

Decision levels: Gasifier

Removal HCs

Reaction of Syn Gas

Heat integration and economic evaluation

Optimal Design of Lignocellulosic Ethanol Plant

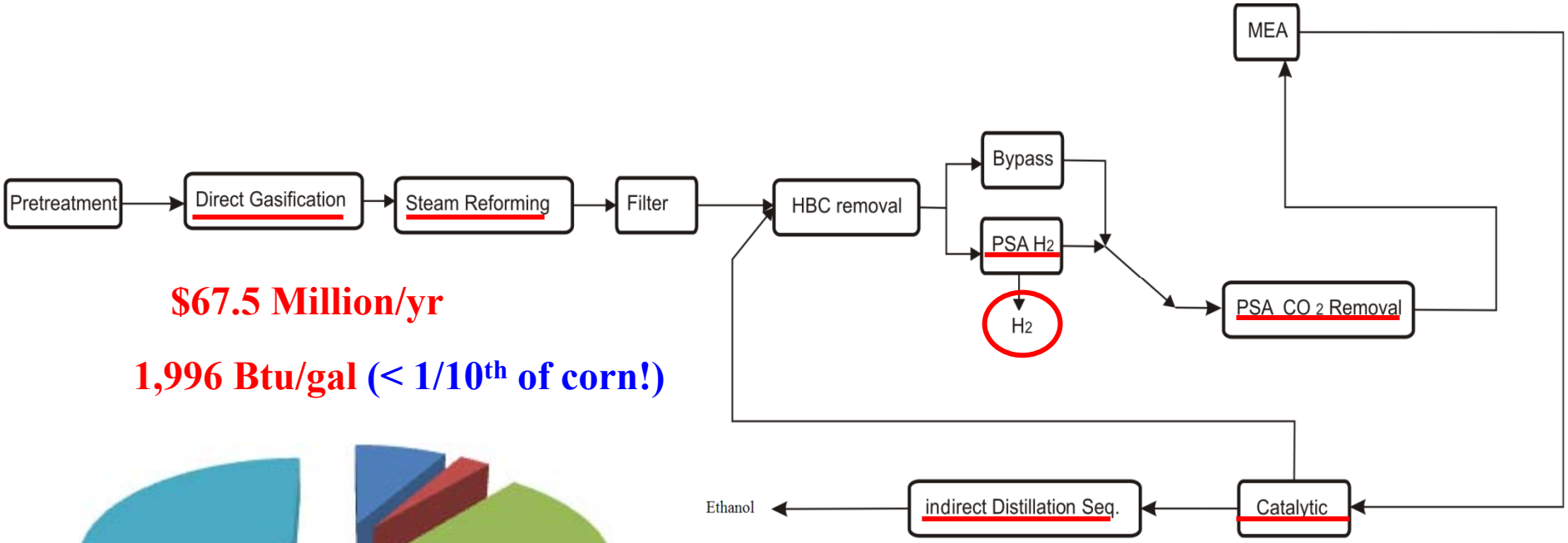

$67.5 Million/yr

1,996 Btu/gal (< 1/10th of corn!)

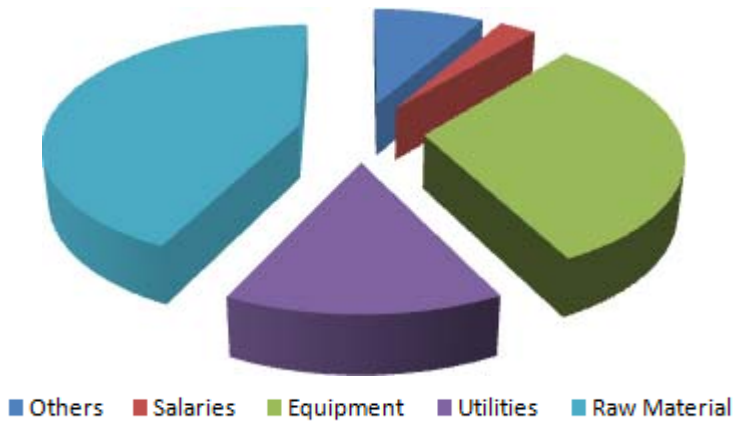

Ethanol: $0.81 /gal ***(no H_2 credits)***
$ 0.42/gal ***(H_2 credits)***

Each NLP subproblem: 7000 eqs., 8000 var
~25 min to solve

Low cost is due to H_2 production

Superstructure Biothanol via Hydrolysis

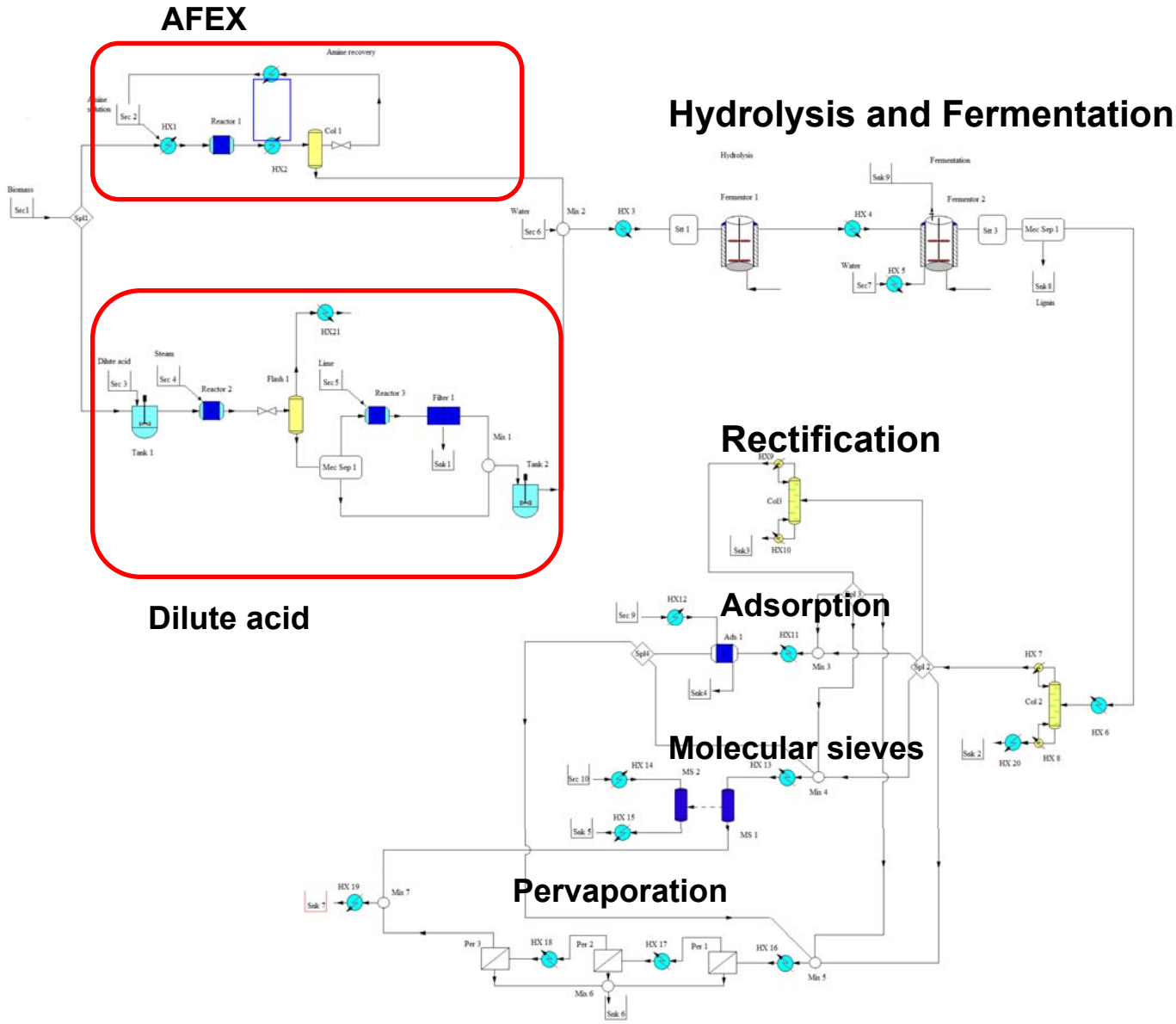

Optimal Flowsheet

$48 Million/yr vs. $67.5 Million/yr (gasification)

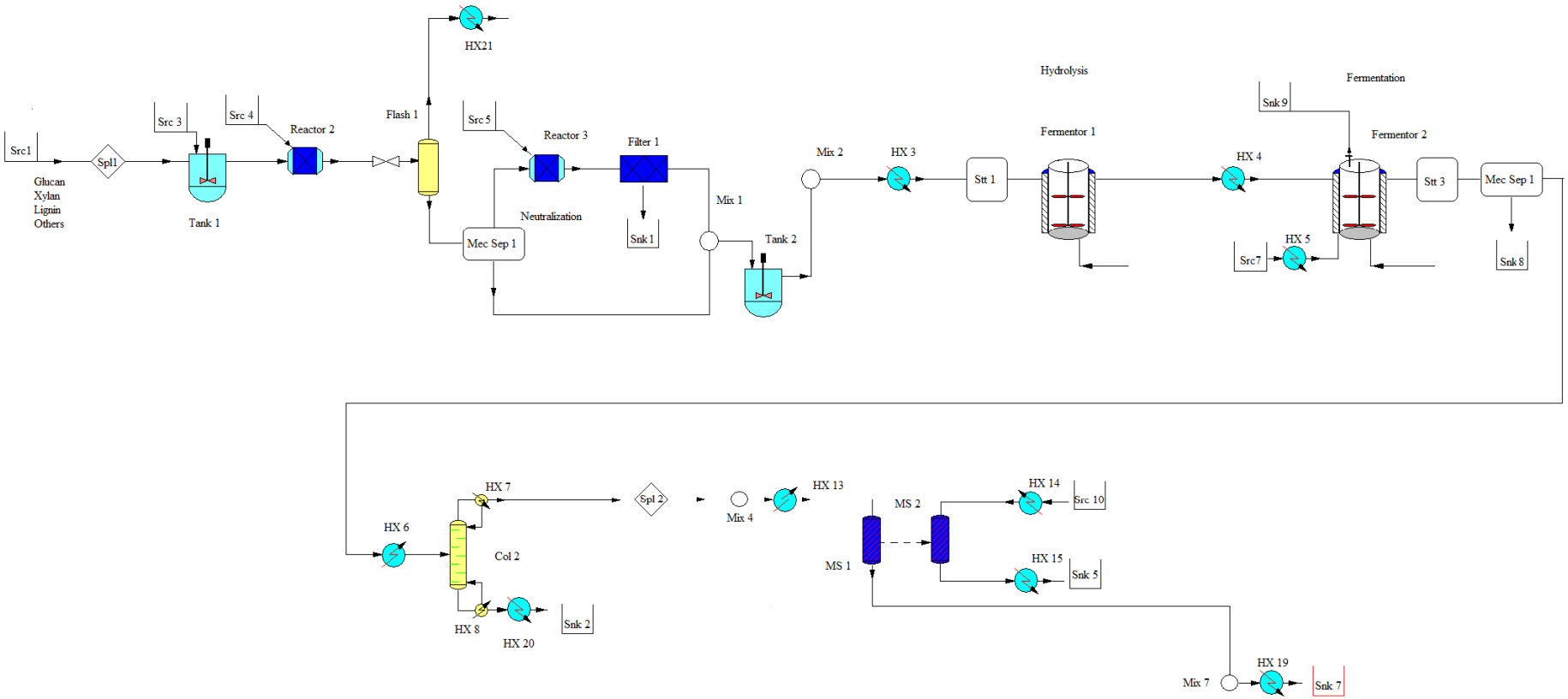

Impact of Lignin

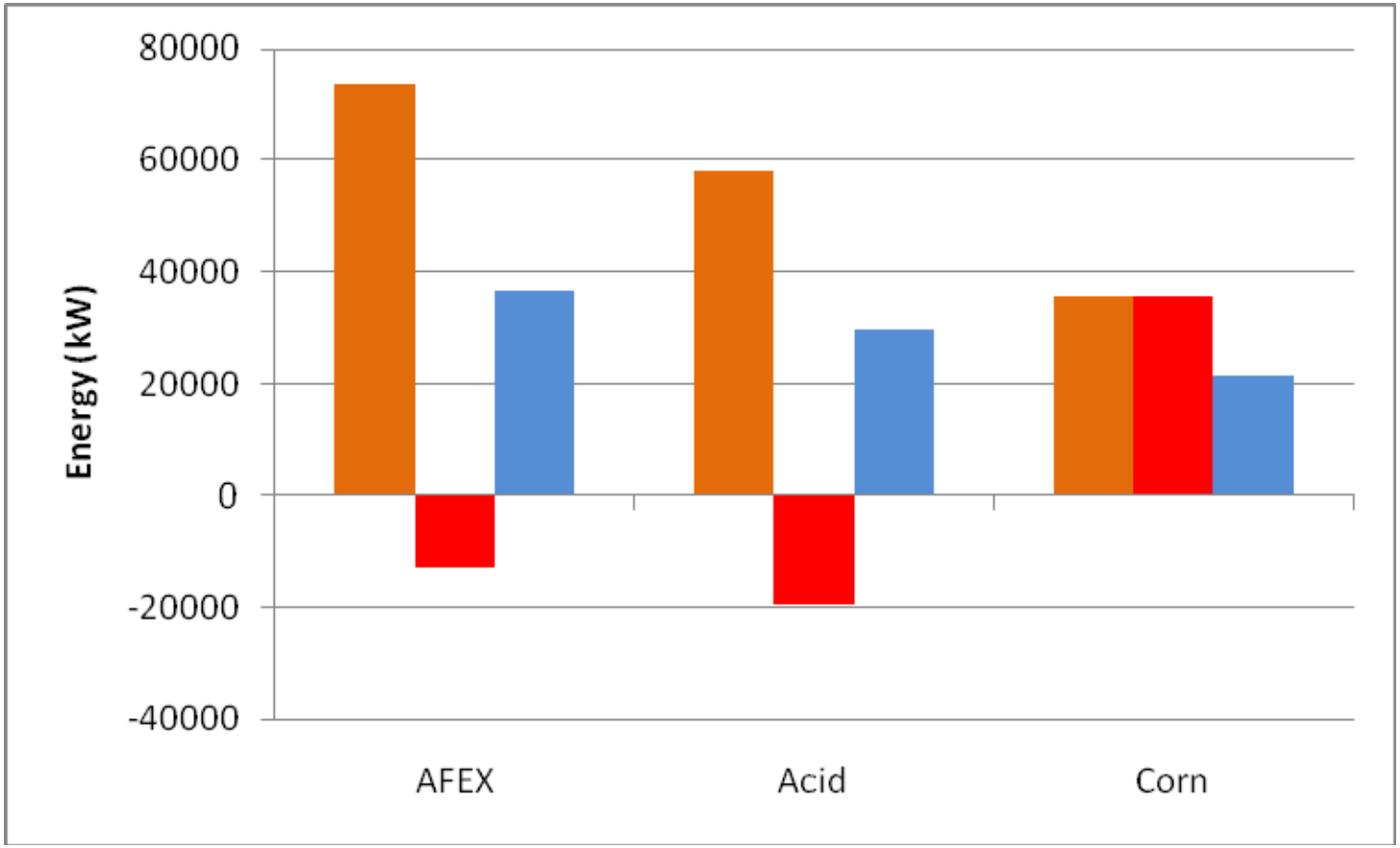

Orange: Energy consumed after superstrucure optimization with heat integration.
Red: Energy consumed after the contribution of lignin
Blue: Cooling water requirements after heat integration

Bioethanol Plant: no water management

Ahmetovic, Martin, Grossmann (2009)

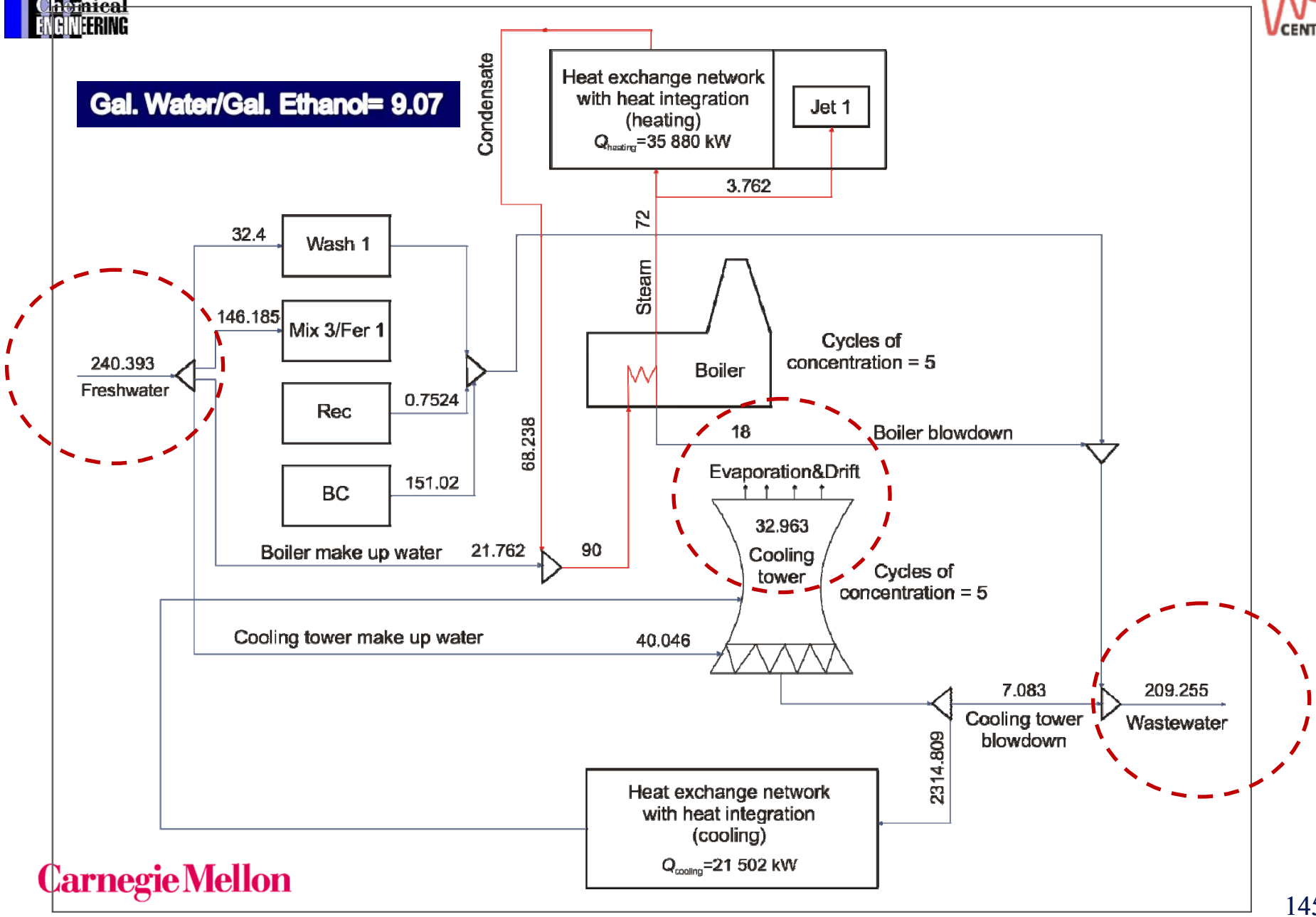

Carnegie Mellon

Optimal Water Network: Corn Ethanol

Gal. Water/Gal. Ethanol = 1.5

1.5 vs 3.4

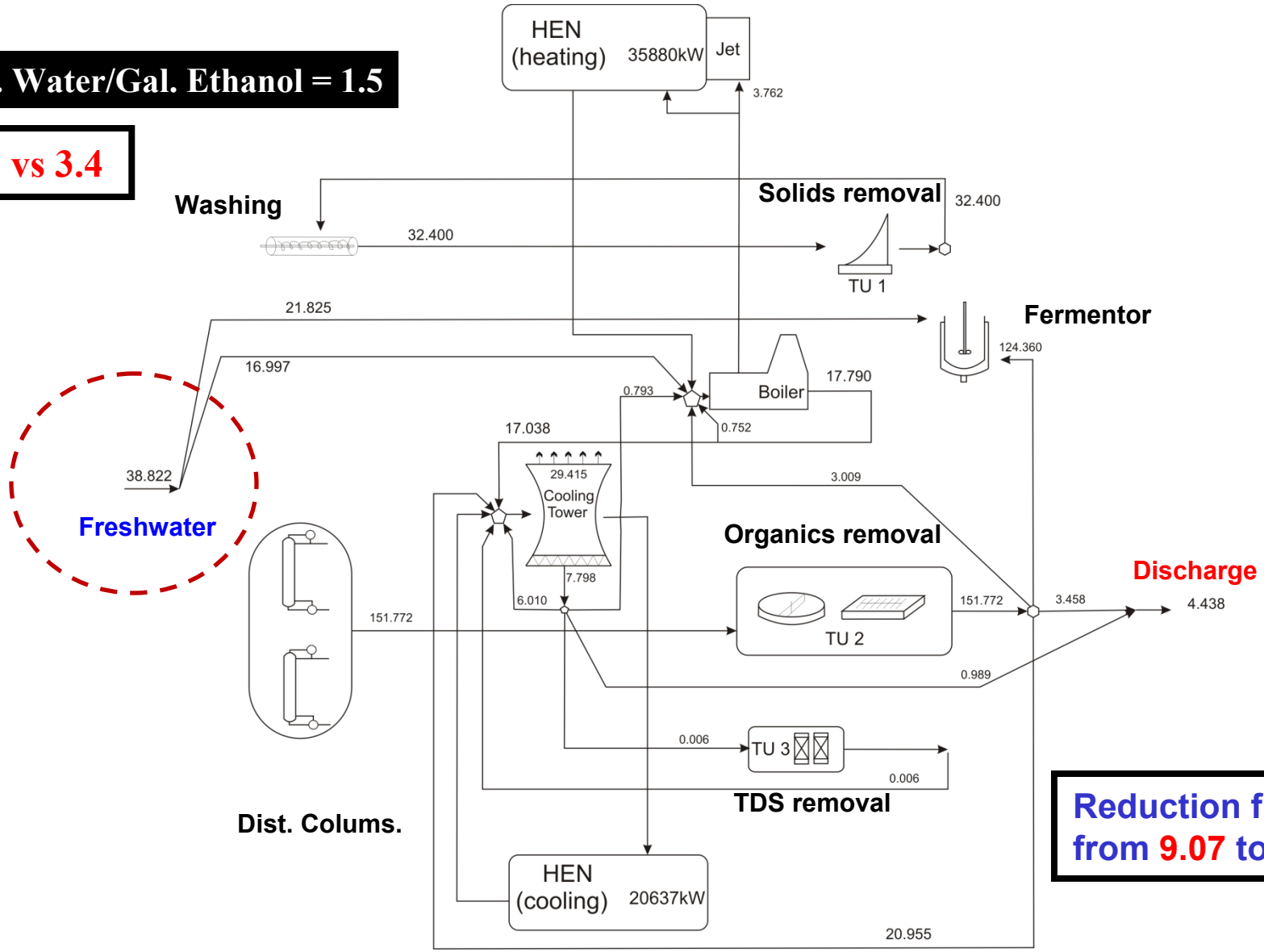

Reduction freshwater from 9.07 to 1.17!

-Ahmetović , E., Martin, M. Grossmann, (2009) I&ECR. **2010, *49, 7972–7982***

Evolution of Water Consumption

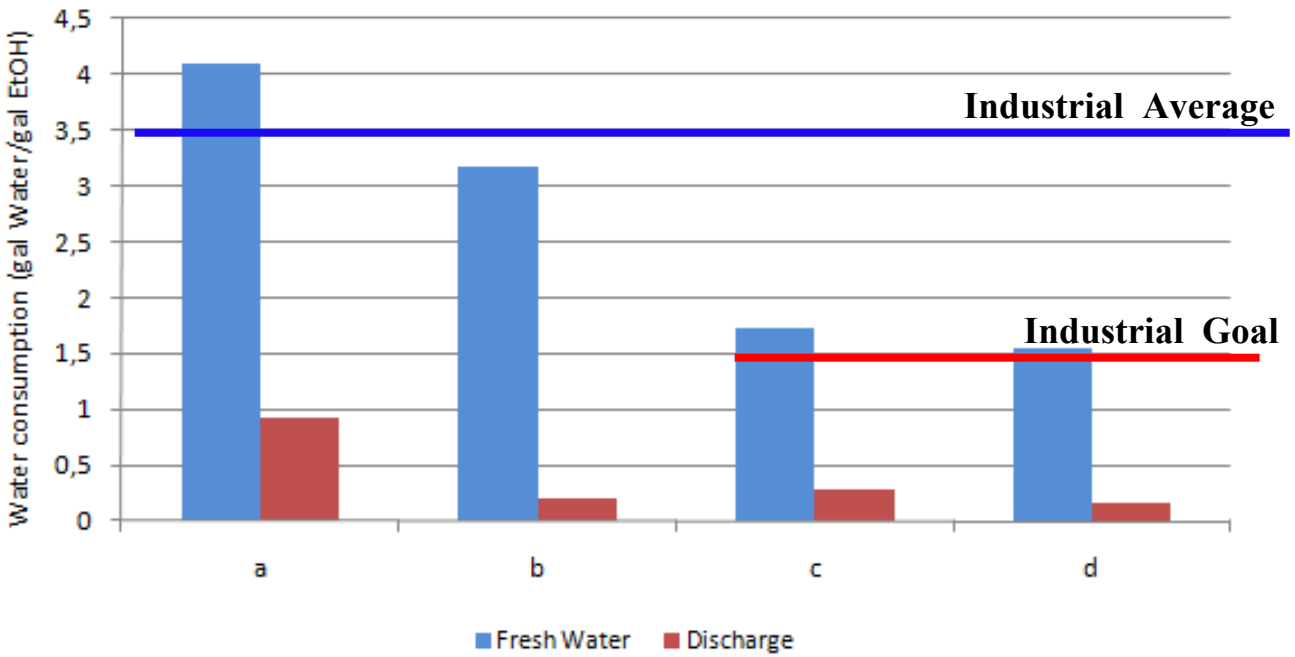

a- Superstrucure opt.
b- Supers. + HEN
c- Supers. + HEN + Mult.
d- Supers. + HEN + Mult (opt. reflux ratio)

Synergy with Heat Recovery

Optimal Water Network: Lignocellulosic Ethanol

Cellulosic Bioethanol via Gasification

Gal. Water/Gal. Ethanol = 4.2

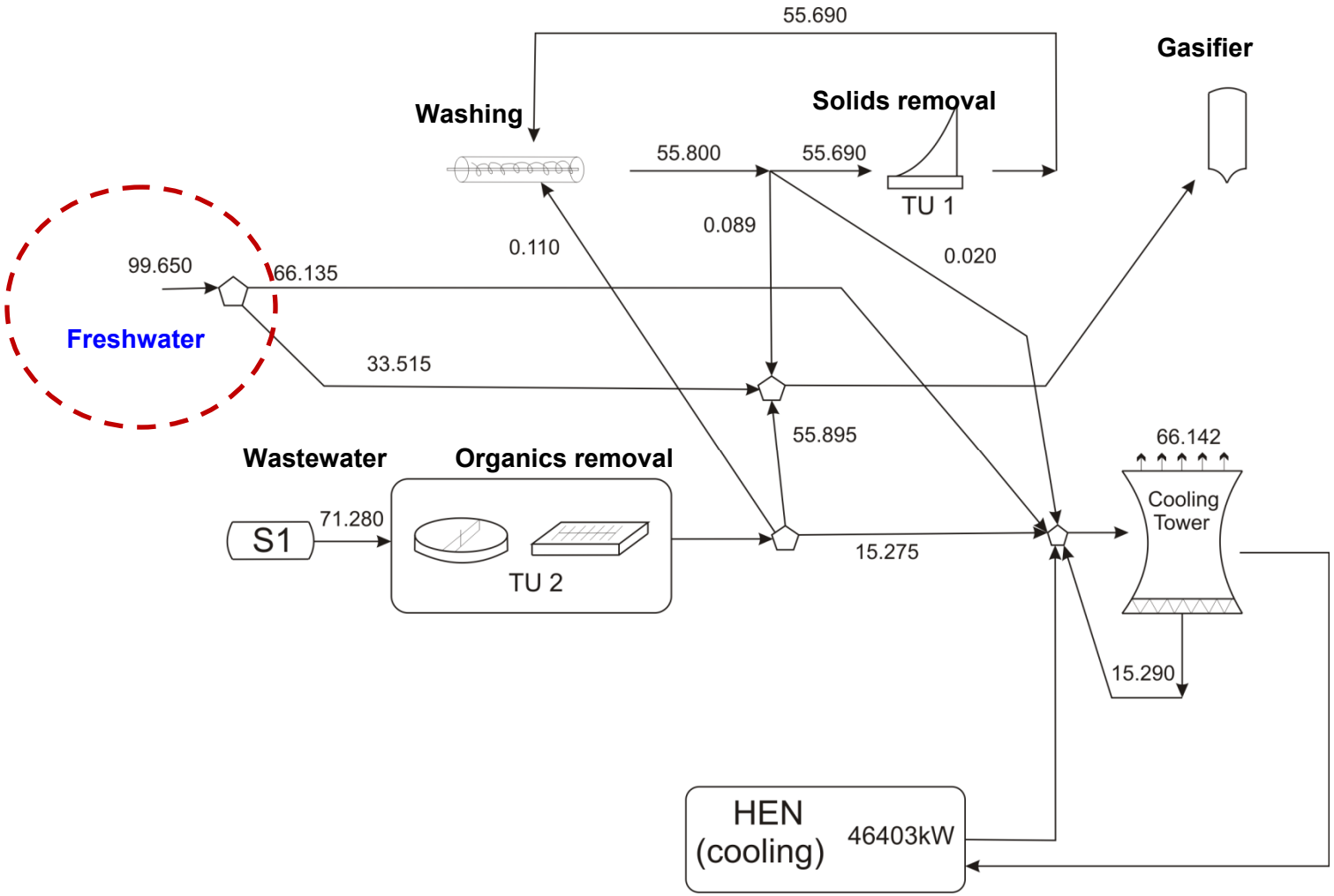

-Martin, M. , Ahmetović, E., Grossmann, I. E (2010) I&ECR ASAP

Optimal Water Network: Lignocellulosic Ethanol

Cellulosic Bioethanol via Hydrolisis

Gal. Water/Gal. Ethanol = 1.7

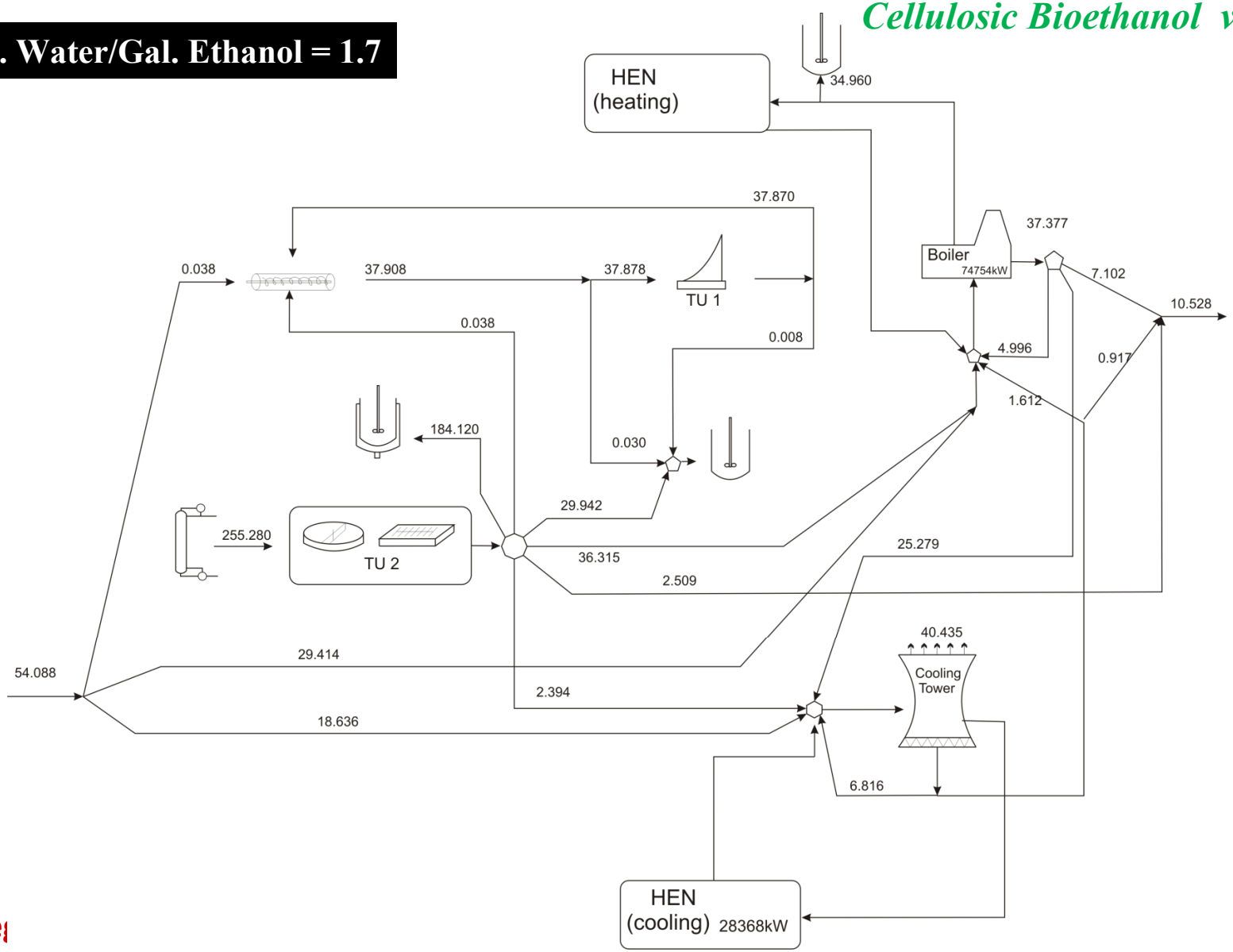

Table Summary of results [6-10]

	Ethanol (Hydrolysis)	Ethanol (Gasification & Catalysis)	Ethanol (Gasification & Fermentation)	FT-Diesel	Hydrogen	Biodiesel (Cooking)	Biodiesel (Algae)
	A	**C**		**D**	**B**	**F**	**E**
Total investment ($MM)	161	335	260	212	148	17	102
Capacity(MMgal/yr)	60	60	60	60	60*	72	72
Biofuel yield (kg/kg_{wet})	0.28	0.20	0.33	0.24	0.11	0.96	0.48
Production cost ($/gal)	0.80	0.41	0.81	0.72	0.68*	0.70	0.47
Water consumption(gal/gal)	1.66	0.36	1.59	--	--	0.33	0.60
Energy consump. (MJ/gal)	-10.2	-9.5	27.2	-60.0	-3.84*	1.94	1.94
Byproduct	Energy	Hydrogen	Hydrogen	Green Gasoline	Energy	Glycerol	Glycerol
	CO_2	Energy	CO_2	Energy	CO_2		Fertilizer
		CO_2		CO_2			

(*) kg instead of gal

[6] Martín, M., Grossmann, I.E. (2011) AIChE J. DOI: 10.1002/aic.12544
[7] Martín, M., Grossmann, I.E. Energy optimization of Hydrogen production from biomass. Rev. Submited to Comp. Chem. Eng.
[8] Martín, M., Grossmann, I.E. Energy optimization of lignocellulosic bioethanol production via Hydrolysis to be submitted AIChE J.
[9] Martín, M., Grossmann, I.E. Process optimization of FT- Diesel production from biomass. To be submitted
[10] Martín, M., Grossmann, I.E. Process optimization bioDiesel production from cooking oil and Algae. To be submitted

Disjunctive Representation with Implicit Models

Caballero, Odjo, Grossmann (2007)

Sequential Modular Simulators	Equation Based Simulators
Equipment libraries data bases Component property data bases Properties estimation	
Numerical methods specifically developed for each process unit. Including Flash calculations in all the streams.	There is no difference between equations. The complete system is represented and solved by a set of equations without taking into account where they come from.
Initialization methods specifically design for each unit.	In general, no specific initialization methods.
Rigid Input-output structure: Lack of flexibility. Convergence of recycles based on fixed point or quasi-Newton (Broyden) methods.	Very flexible. Almost any specification possible. Quadratic Convergence (Newton based methods for solving equations).
Very robust and reliable.	Faster, and more flexible but less robust and reliable

Generalized Disjunctive Model

Integration with Process Simulators (implicit functions)

$$\min : f(x_I, x_D, u)$$

Objective Function (i.e. total annual cost)

$$s.t.\ \ r_I(x_I, x_D, u) = 0$$

Implicit constraints common to all the alternatives

$$\left.\begin{array}{l} s_E(x_I, x_D, u) = 0 \\ s_E(x_I, x_D, u) \le 0 \end{array}\right\}$$

Explicit constraints common to all the alternatives

$$\bigvee_{i \in D_j} \left[\begin{array}{c} Y_{i,j} \\ h_{I_{i,j}}(x_I, x_D, u) = 0 \\ \left.\begin{array}{l} h_{E_{i,j}}(x_I, x_D, u) = 0 \\ g_{E_{i,j}}(x_I, x_D, u) \le 0 \end{array}\right\} \end{array}\right] \quad \forall\, j \in J$$

Implicit constraints depending on the boolen Y_{ij}

Explicit constraints depending on the boolen Y_{ij}

$$\Omega(Y) = True$$

Logical relationships

$$x_I \in X \subseteq \Re^n$$

$$Y \in \{True, False\}^m$$

Carnegie Mellon

Disjunctive Representation

$$\min : f(x_I, x_D, u)$$

$$s.t.\ r_I(x_I, x_D, u) = 0$$
$$s_E(x_I, x_D, u) = 0$$
$$s_E(x_I, x_D, u) \le 0$$

$$\bigvee_{i \in D_j} \begin{bmatrix} Y_{i,j} \\ h_I(x_I, x_D, u) = 0 \\ h_E(x_I, x_D, u) = 0 \\ g_E(x_I, x_D, u) \le 0 \end{bmatrix} \quad \forall\, j \in J$$

$$\Omega(Y) = True$$

$$x_I \in X \subseteq \Re^n$$

$$Y \in \{True, False\}^m$$

***x_I* Independent variables:** **Specifications or degrees of freedom in the modular process simulator (or any other third party program). The user has a complete control over these variables.**

***x_D* Dependent variables.** **They can only be read. Their value depend on the *x_I* variables.**

***u* variables that must be fixed.** **The user has only an indirect control of these variables (i.e. trays in a column).**

Algorithms

Regular and Disjunctive Branch and Bound (Gupta & Ravindran,1985; Lee & Grossmann,2000)

Solve series of NLP problems in a tree search (no Master needed)

Outer Approximation –MINLP reformulation- (Duran and Grossmann,)
Logic Based Outer Approximation (Turkay & Grossmann, 1996)
Modeling and Decomposition (Kocis & Grossmann, 1989)

LP-NLP Based Branch and Bound (Quesada and Grossmann, 1992)
Logic LP-NLP Based Branch and Bound

-Iterate between NLPs and Master (MILP) problems.
-In Outer Approximation the Master is solved to optimality in each major iteration.
-In LP-NLP based branch and bound the an NLP problem is solved when an Integer solution is found in the tree search of Master problems, all open nodes in the Master are then updated.

Solution Algorithms

Step 1. In the process simulator:

If the topology is fixed:

Select the independent variables (specifications). Chose a set of variables that makes that the simulation converges easily.
-Difficult constraints or difficult specifications should be done through external constraints-.

If the topology is variable: (not all the units necessarily exist in a feasible flowsheet)

It is necessary to study of each unit in order to prevent unexpected behavior, i.e. Lack of convergence due to zero flows.
If possible select the variables that minimizes (or avoid) those problems.

In some situations it would be necessary especial algorithms .
For process synthesis a good option are the "logic based algorithms"
(Turkay and Grossmann, 1996), (Kocis and Grossmann, 1989)

Step 2.

a. In the disjunctions there are no implicit equations:
Reformulate to MINLP using Big M or Convex Hull.

b. In the disjunctions there are implicit equations, but they do not affect the topology
Reformulate to MINLP using a Big M reformulation.

c. In the disjunctions there are implicit equations that modify the topology
Solve each of the fixed topology NLP subproblems, or the 'main' subproblem and perform sub-lagrangian optimizations of the other units. ***(Logic Based Algorithms)***

Solve the following NLP (r-MINLP).

$$\min_{x_I} : f(x_I, x_D, u)$$

$$s.t.\ r_I(x_I, x_D, u) = 0$$

$$r_E(x_I, x_D, u) = 0$$

$$s_E(x_I, x_D, u) \le 0$$

← **Implicit equations (i.e. process simulator)**

$$h^*_{E_{i,j}}(x_I, x_D, u, y_{i,j}) = 0$$

$$g^*_{E_{i,j}}(x_I, x_D, u, y_{i,j}) \le 0$$

← **Big M, convex hull reformulation or fixed topology sub-problem**

$$Ay - b \le 0$$

$$0 \le y \le 1$$

← **Algebraic representation of logical equations, in terms of binary variables**

Step 3.

Generate (if necessary) the following Master MILP Problem

$$\min_{\alpha, x_I, s} \quad \alpha + \Pi^T (s_1 + s_2 + s_3 + s_4)$$

$$\left.\begin{aligned}
&\alpha \geq f[x_I^k, x_D(x_I^k), u] + \nabla_{x_I} f[x_I^k, x_D(x_I^k), u](x_I - x_I^k) \\
&\lambda_1^T \ \nabla_{x_I} r_E[x_I^k, x_D(x_I^k), u](x_I - x_I^k) \leq s_1 \\
&s_E[x_I, x_D(x_I), u] + \nabla_{x_I} s_E[x_I, x_D(x_I), u](x_I - x_I^k) \leq s_2 \\
&\lambda_2^T \nabla_{x_I} h_E^*[x_I^k, x_D(x_I^k), u, y_{i,j}^k] \begin{pmatrix} x_I - x_I^k \\ y_{i,j} - y_{i,j}^k \end{pmatrix} \leq s_3 \\
&g_E^*[x_I^k, x_D(x_I^k), u, y_{i,j}^k] + \nabla_{x_I} g_E^*[x_I^k, x_D(x_I^k), u, y_{i,j}^k] \begin{pmatrix} x_I - x_I^k \\ y_{i,j} - y_{i,j}^k \end{pmatrix} \leq s_4
\end{aligned}\right\} \quad \mathbf{k = 1, 2 \ldots K}$$

$$Ay - b \leq 0$$

$$y \in \{0,1\}^m$$

Notes:

MILP only depends on x_I and slacks.

$$x_D = \Phi_I(x_I, u)$$

x_D is a function of x_I. The linearization is done using the chain rule through the flowsheet or the implicit equations.

$$\nabla_{x_I} f = \frac{\partial f}{\partial x_I} + \frac{\partial f}{\partial x_D} \frac{d x_D}{d x_I}$$

Practical Implementation

All algorithms BB, OA, LP-NLP_BB were implemented in MATLAB 7.1.

All the steps: generation and solving Masters and NLPs problems are controlled from MATLAB.

Flowsheet simulated and converged in HYSYS.Plant 3.2

Auxiliary NLP and MILP solvers external to process simulator:
MATLAB-TOMLAB (SNOPT 7, CONOPT 3, CPLEX 10)

Communication between MATLAB and HYSYS through ActiveX (Windows COM)

All other implicit equations (all but those in the process simulator) were developed as functions in MATLAB.

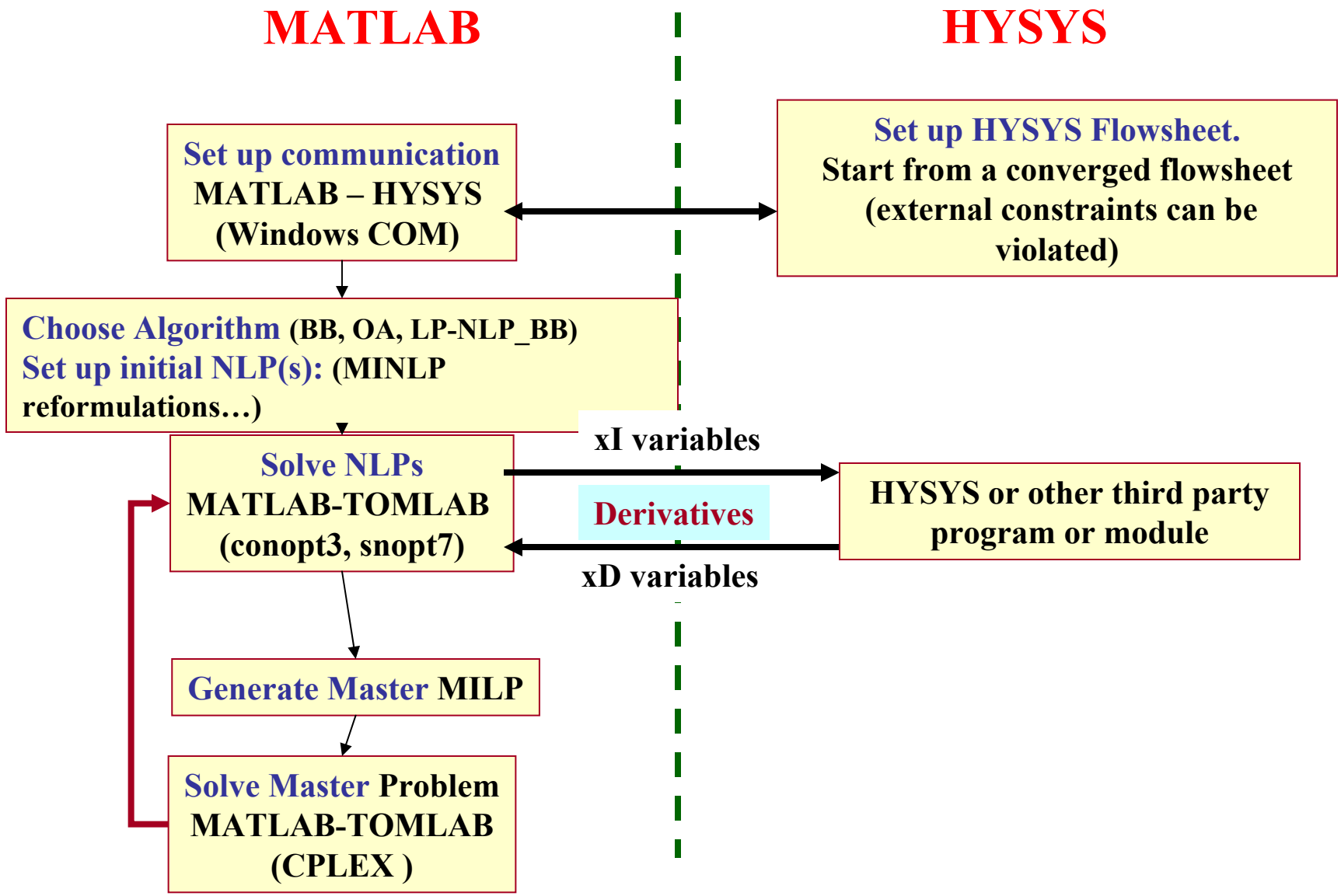
MATLAB
HYSYS
Set up communication
MATLAB – HYSYS
(Windows COM)
Set up HYSYS Flowsheet.
Start from a converged flowsheet
(external constraints can be
violated)
Choose Algorithm (BB, OA, LP-NLP_BB)
Set up initial NLP(s): (MINLP
reformulations…)
xI variables
Solve NLPs
MATLAB-TOMLAB
(conopt3, snopt7)
Derivatives
HYSYS or other third party
program or module
xD variables
Generate Master MILP
Solve Master Problem
MATLAB-TOMLAB
(CPLEX)

Example 1

Three heat exchangers network (Adapted from Turkay and Grossmann, 1996)

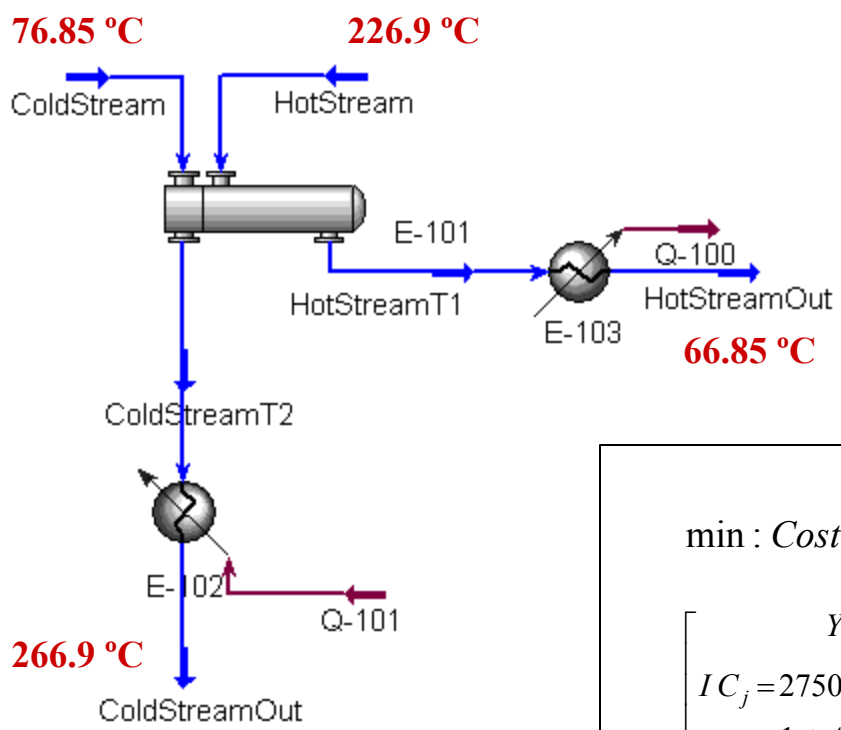

HYSYS Flowsheet

Some Data

Stream	Tin (K)	Tout (K)	Cost ($/kW-year)
Hot	500	340	
Cold	350	560	
Cooling W	323	363	20
Heating V	557	557	80

Heat Exchanger	U (kW/ m² K)
E-101	1.5
E-102	0.5
E-103	1.0

$$\min : Cost\ utilities + Investment\ Cost$$

$$\begin{bmatrix} Y_{j,1} \\ IC_j = 2750\ A_j^{0.6} + 3000 \\ 1 \le A_j \le 10 \end{bmatrix} \veebar \begin{bmatrix} Y_{j,2} \\ IC_j = 1500\ A_j^{0.6} + 15000 \\ 10 \le A_j \le 25 \end{bmatrix} \veebar \begin{bmatrix} Y_{j,3} \\ IC_j = 600\ A_j^{0.6} + 46500 \\ 25 \le A_j \le 50 \end{bmatrix}$$

$$T_{HotStreamT1} \ge T_{out\_water} + 10$$

RESULTS

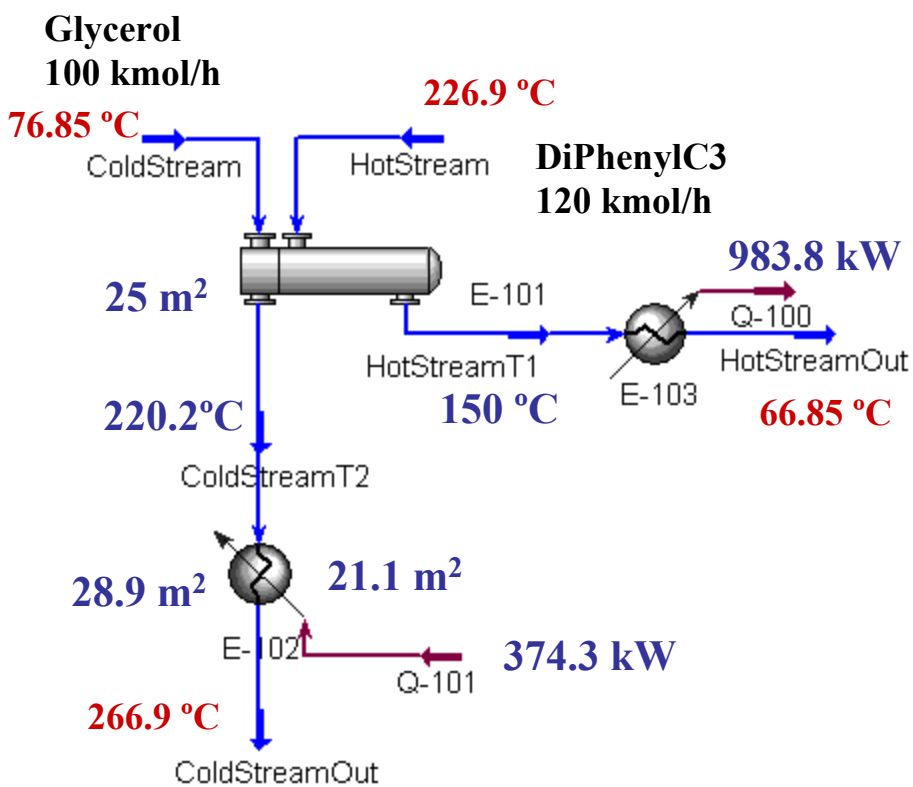

Branch and Bound

Obj = 150322 $/year
Relaxed NLP (Big M) = 49259
Total NLP nodes = 37
CPU time (s) = 49.2
Solver = conopt (or snopt)

LP-NLP-BB

Obj = 150322 $/year
Relaxed NLP (Big M) = 49259
Total LP nodes = 17
Total NLP (subproblems) = 3
CPU time (s) = 4.01
Solver = snopt./Cplex

OA / ER / AP

Obj = 150322 $/year
Relaxed NLP (Big M) = 49259
Total Major iterations = 4
CPU time (s) = 5.18
Solver = snopt./Cplex

Example 2. DME Plant

$$\begin{bmatrix} \text{Double Pipe} \\ A = f\left(T_H^{in}, T_H^{out}, T_C^{in}, T_C^{out}\right) \\ Cost_{DP} = C_{DP}(A) \\ 1 \end{bmatrix} \veebar \begin{bmatrix} \text{Multiple\_Pipe} \\ A = f\left(T_H^{in}, T_H^{out}, T_C^{in}, T_C^{out}\right) \\ Cost_{MP} = C_{MP}(A) \end{bmatrix} \veebar \begin{bmatrix} \text{Fixed Head} \\ A = f\left(T_H^{in}, T_H^{out}, T_C^{in}, T_C^{out}\right) \\ Cost_{FH} = C_{FH}(A) \\ 10 \le A \le 1000 \end{bmatrix}$$

$$\begin{bmatrix} \text{Air Cooler} \\ A = A\left(T_{in}^{s}, T_{out}^{s}, T_{in}^{Air}, T_{out}^{Air}, U_{Air}\right) \\ Cost = C_{Air}(A) \\ Cost_{UtilityAir} = 0 \end{bmatrix} \veebar \begin{bmatrix} \text{HE\_Water} \\ A = A\left(T_{in}^{s}, T_{out}^{s}, T_{in}^{W}, T_{out}^{W}, U_{W}\right) \\ Cost = C_{TS}(A) \\ Cost_{UtilityAir} = Cost\_Water \end{bmatrix}$$

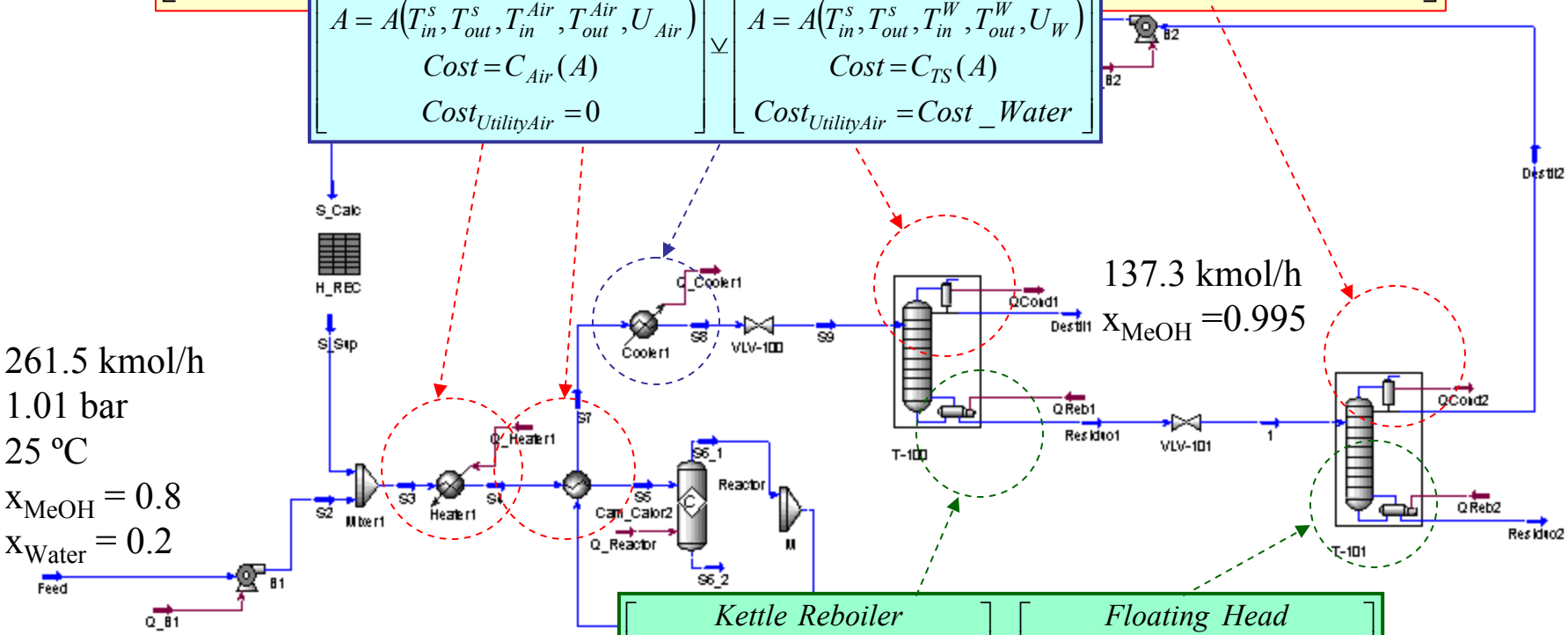

261.5 kmol/h
1.01 bar
25 ºC
$x_{MeOH} = 0.8$
$x_{Water} = 0.2$

137.3 kmol/h
$x_{MeOH} = 0.995$

$$\begin{bmatrix} \text{Kettle Reboiler} \\ A = A\left(T_{in}^{s}, T_{out}^{s}, T_{in}^{V}, T_{out}^{R}, U_{Air}\right) \\ Cost = C_{Kettle}(A) \\ Cost_{Utility} = Cost\,Vapor \end{bmatrix} \veebar \begin{bmatrix} \text{Floating Head} \\ A = A\left(T_{in}^{s}, T_{out}^{s}, T_{in}^{V}, T_{out}^{R}, U_{W}\right) \\ Cost = C_{FH}(A) \\ Cost_{UtilityAir} = Cost\_Vapor \end{bmatrix}$$

Example 2. DME Plant (cont.)

Recycled converged by the Optimizer

$$\begin{bmatrix} \text{Tray Column} \\ Size_{Vessel} = f(N, L, V, \rho ...) \\ Cost_{Vessel} = f(H, D) \\ Cost_{Internals} = F(N, material) \\ D \geq 1m \end{bmatrix} \veebar \begin{bmatrix} \text{Packed Column} \\ Size_{Vessel} = f(N, L, V, \rho ...) \\ Cost_{Vessel} = f(H, D) \\ Cost_{Internals} = F(N, material) \\ D \leq 1m \end{bmatrix}$$

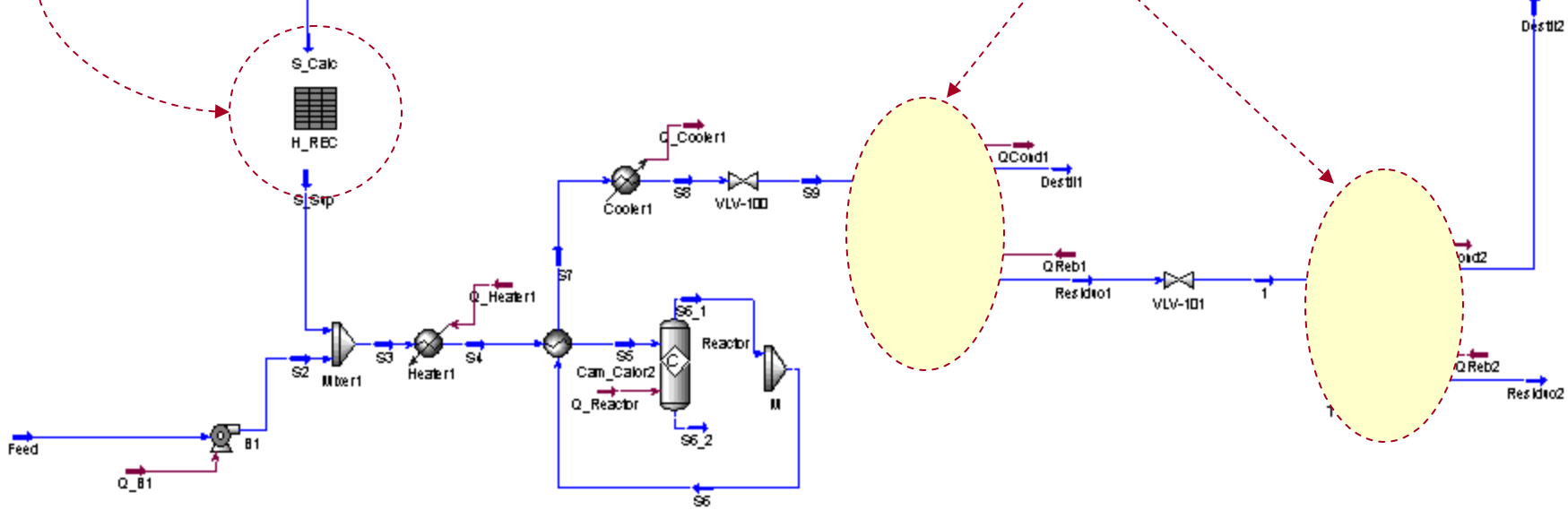

Optimal Solution

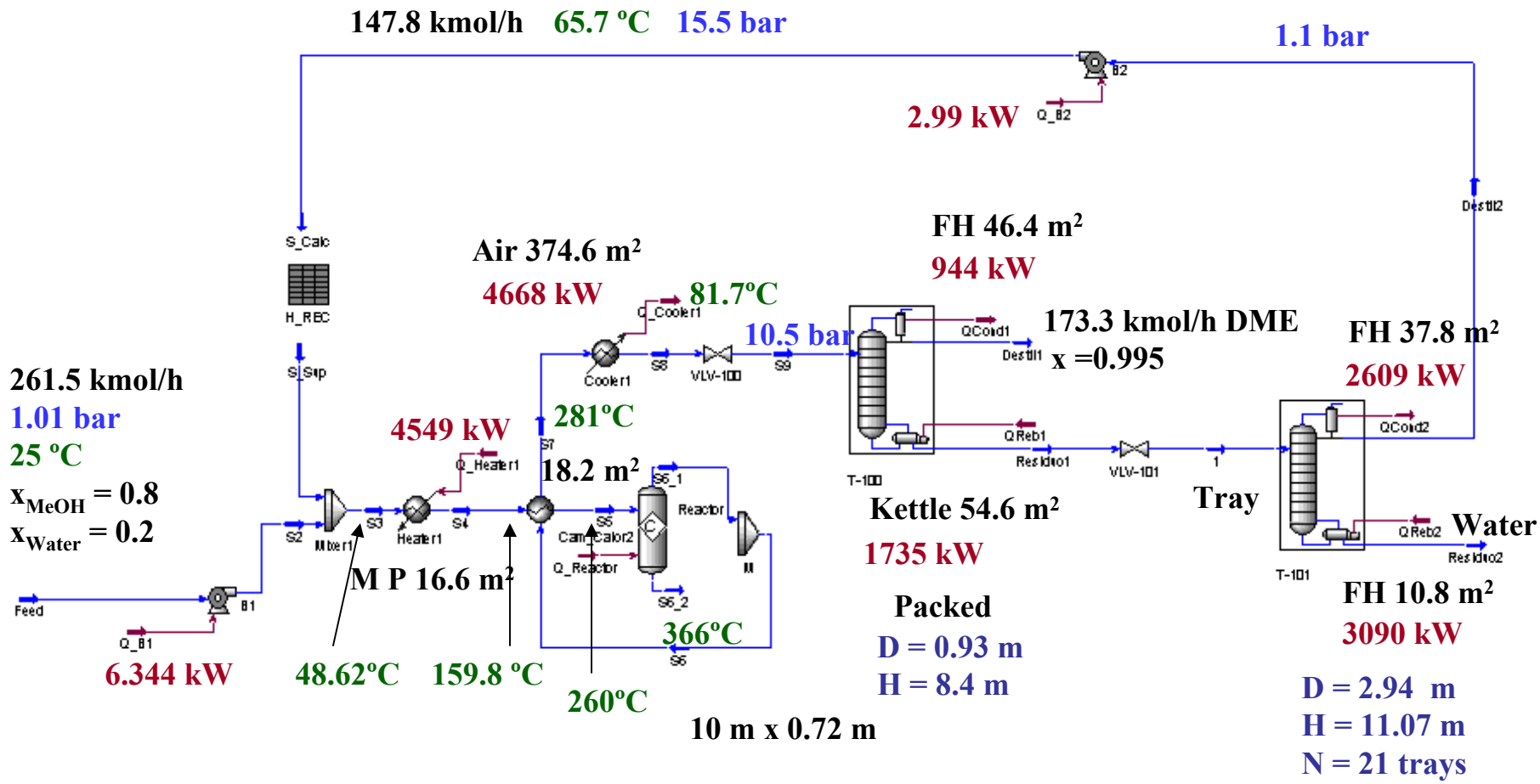

TAC = 1.002x10⁶ $/year

Optimal Solution: 1.002 10^6 \$/year
Initial Relaxed Solution: 9.45 10^6 \$/year (Gap 5.5%)
Reformulated to MINLP mixed Big M- convex hull

12 linear constraints
63 explicit non-linear constraints
72 variables (22 binary, 12 in the flowsheet)

39 implicit blocks of equations: sizing, cost estimation…
And the equation in the flowsheet (Hysys).

LP-NLP_BB

Total CPU time = 2423 s
Number of NLPs = 9
LP nodes = 111.
Solvers: snopt, cplex

Outer Approximation

Total CPU time = 2219 s
Number of Major iterations = 4
Solvers: snopt, cplex

Remark: Most of the CPU time is spent estimating derivatives.
However, typically the NLP takes 10-20 major iterations.

Rigorous Flowsheet Optimization using Process Simulators and Surrogate Models

Caballero, Grossmann (2008)

Motivation

Perform flowsheet synthesis using models from process simulators

Black box models ⇒

- No access to the original code
- In some cases significant CPU computation time is required
- Usually derivatives are not available

In modular process simulators:

- No derivative information available
- Usually perturbation does not provide accurate values due to the noise introduced by the model

Kriging Interpolation:

$$y(x) = f(x) + Z(x)$$

Usually f(x) = μ

Kriging assumes that errors are not independent but a function of x

$$E\left(Z(x)\right) = 0$$

$$\mathrm{cov}\left(Z(\mathbf{x}_i), Z(\mathbf{x}_j)\right) = \sigma^2 \mathbf{R}(\mathbf{x}_i, \mathbf{x}_j)$$

σ^2 = Process Variance

$$\mathbf{R}\left(\mathbf{x}_i, \mathbf{x}_j\right) = \exp\left(-\sum_{l=1}^{d} \theta_l \left|\mathbf{x}_{i,l} - \mathbf{x}_{j,l}\right|^{P_l}\right)$$

$$\theta_l \geq 0; \quad 0 \leq P_l \leq 2$$

Spatial correlation function : No Euclidean

Include adjustable parameters
Due to these parameters it is not sensitive to the units of measurements

The final predictor for the new point (x^{new}, y^{new})

$$\hat{y}\left(x^{new}\right) = \hat{\mu} + \mathbf{r}^T \mathbf{R}^{-1}\left(\mathbf{y} - \mathbf{1}\hat{\mu}\right)$$

$$s^2(x^{new}) = \hat{\sigma}^2\left(1 - \mathbf{r}^T \mathbf{R}^{-1}\mathbf{r} + \frac{(1 - \mathbf{r}^T \mathbf{R}^{-1}\mathbf{r})^2}{\mathbf{1}^T \mathbf{R}^{-1}\mathbf{1}}\right)$$

Standard error predicted by the interpolator

(a non interpolation version is easy to implement as well)

Kriging Example

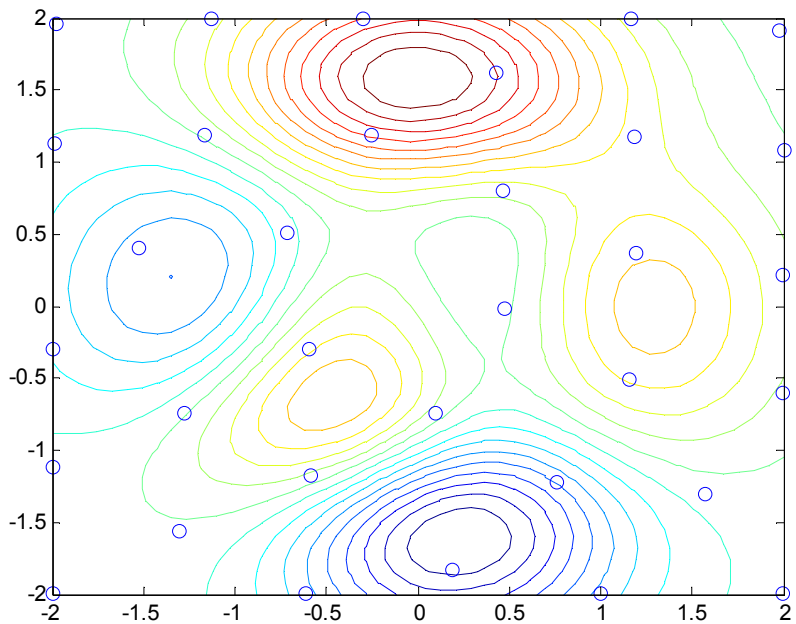

Actual function

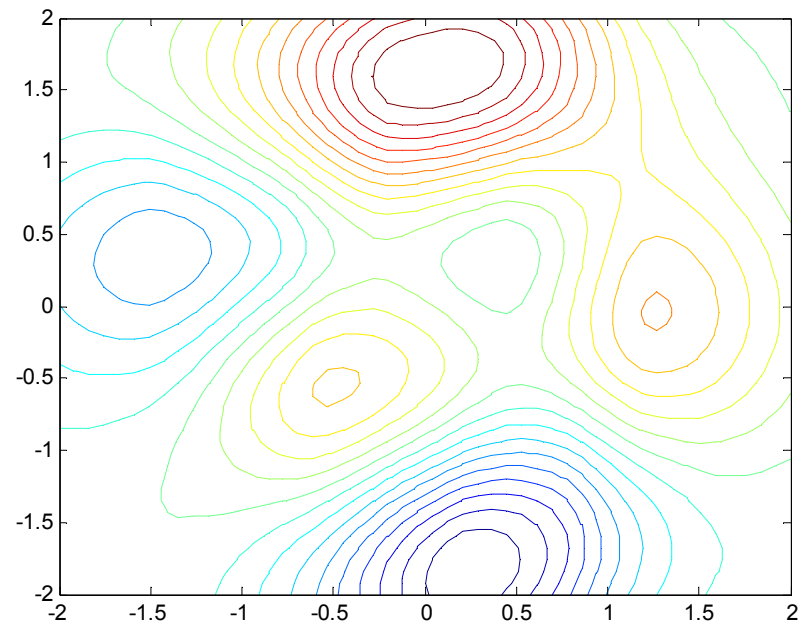

Kriging interpolation based on the 33 points in figure

$$z = 3(1-x)^2 e^{-x^2} - (y+1)^2 - 10\left(\frac{x}{5} - x^3 - y^5\right) e^{\left(-x^2-y^2\right)} - \frac{1}{3} e^{\left(-(x+1)^2-y^2\right)}$$

Kriging Example

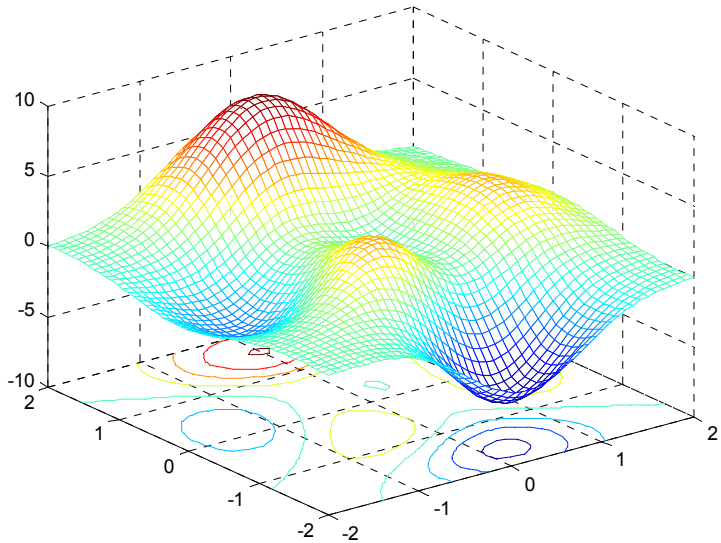

Actual function

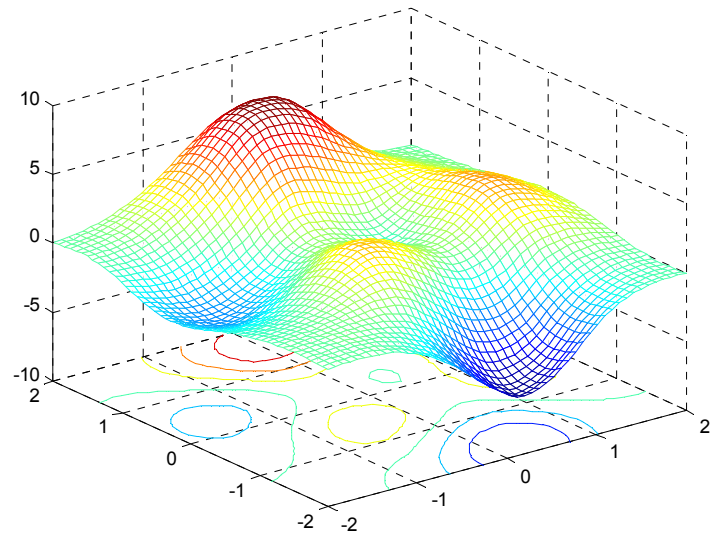

Kriging interpolation

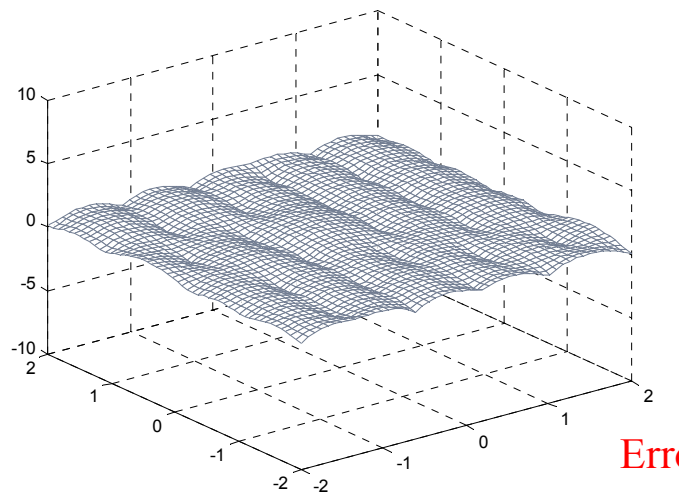

Errors predicted by the kriging

$$z = 3(1-x)^2 e^{-x^2} - (y+1)^2 - 10\left(\frac{x}{5} - x^3 - y^5\right)e^{\left(-x^2-y^2\right)} - \frac{1}{3}e^{\left(-(x+1)^2-y^2\right)}$$

$\frac{\partial z(x,y)}{\partial x}$ Analytical

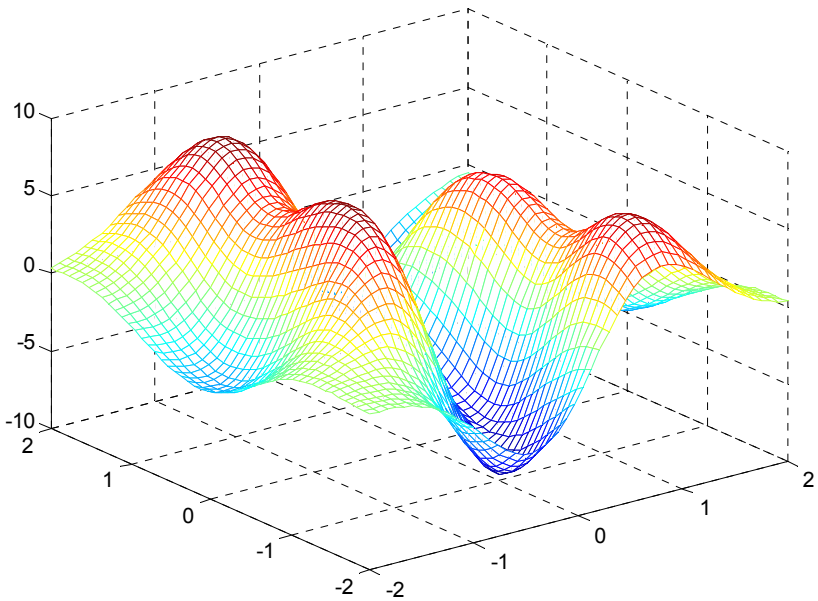

$\frac{\partial z(x,y)}{\partial x}$ Calculated by kriging

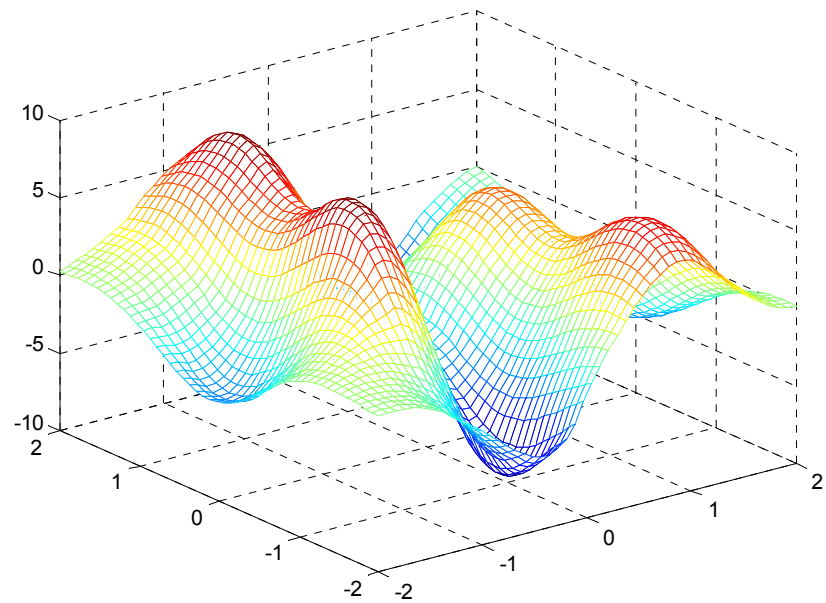

Algorithm

1. Select unit operation(s) to be substituted by a metamodel
2. Bounds on variables (as tight as possible)
3. Sampling

The sampling must be done to preserve the uniformity of the distribution and avoid 'correlation'.

Latin Hypercube sampling, Hammersley, Halton o Sobol

$$\max \min \sum_i \sum_j d_{i,j}$$ di,j = distance between sample points i and j

4. Generate kriging model

   Adjust parameters using an available NLP solver (SNOPT, CONOPT)

5. Validate kriging model : Cross validation
6. Optimization using the kriging metamodel instead of the selected unit operations

   (Using any NLP solver available i.e. SNOPT, CONOPT, KNITRO)

7. Refinement stage (optional):
8. Re-sampling and recalibration
9. Repeat from point 6 until convergence

Example: phtalic anhydride from o-xylene

Min : Total annual cost =
Fixed + variable costs
(compressor, pump, heater, cooler, reactor, flash, column)

s.t. cost and sizing equations
ph. Anhydride > 0.99 (molar fraction)

$$(R1)\quad 3O_2 + \underset{\text{o-xylene}}{C_8H_{10}} \longrightarrow 3H_2O + \underset{\text{phthalic anhydride}}{C_6H_4(CO_2)_2O}$$

$$(R2)\quad 7.5O_2 + \underset{\text{o-xylene}}{C_8H_{10}} \longrightarrow \underset{\textit{maleic anhydride}}{C_4H_2O_3} + 4CO_2 + 4H_2O$$

$$(R3)\quad 10O_2 + \underset{\text{o-xylene}}{C_8H_{10}} \longrightarrow 8CO_2 + 5H_2O$$

Plug flow reactor substituted by kriging metamodels

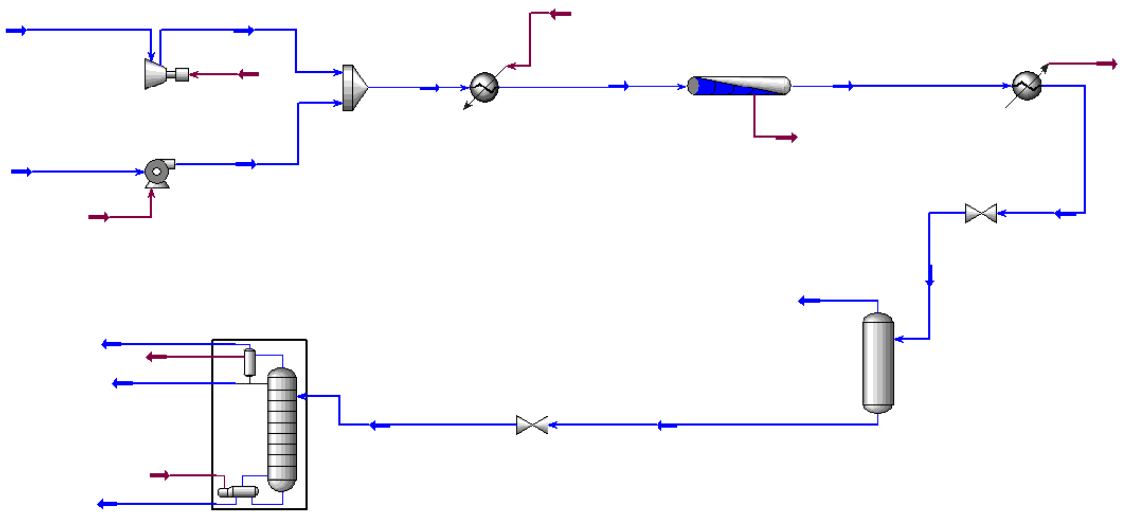

Number of sample points = 71

Convergence in two major iterations
Total CPU time = 169.9 s. ; SOLVER = SNOPT7

Example: Optimal solution

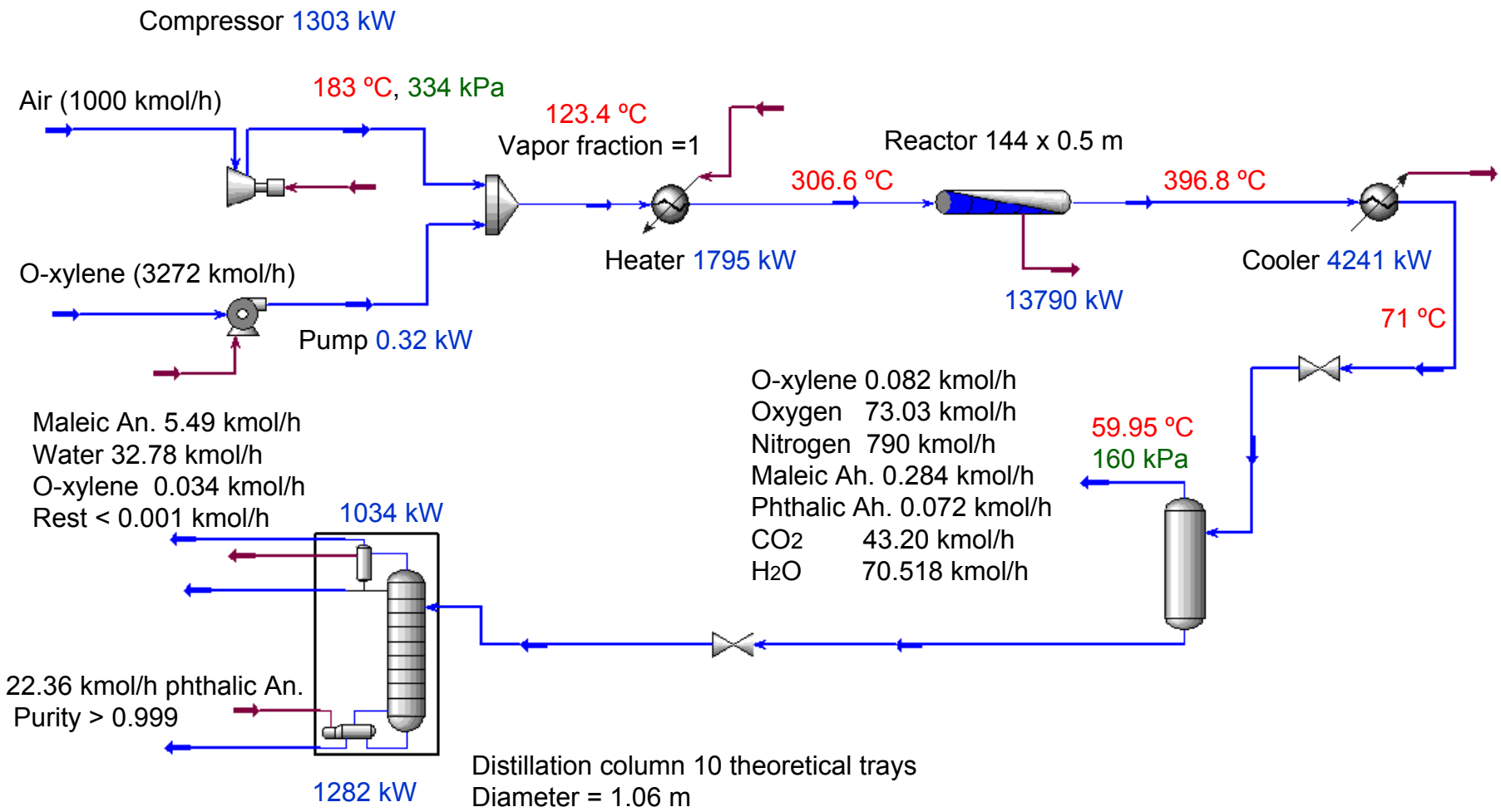

Introduction & Motivation

Henao, Maravelias (2010)

- The whole picture:

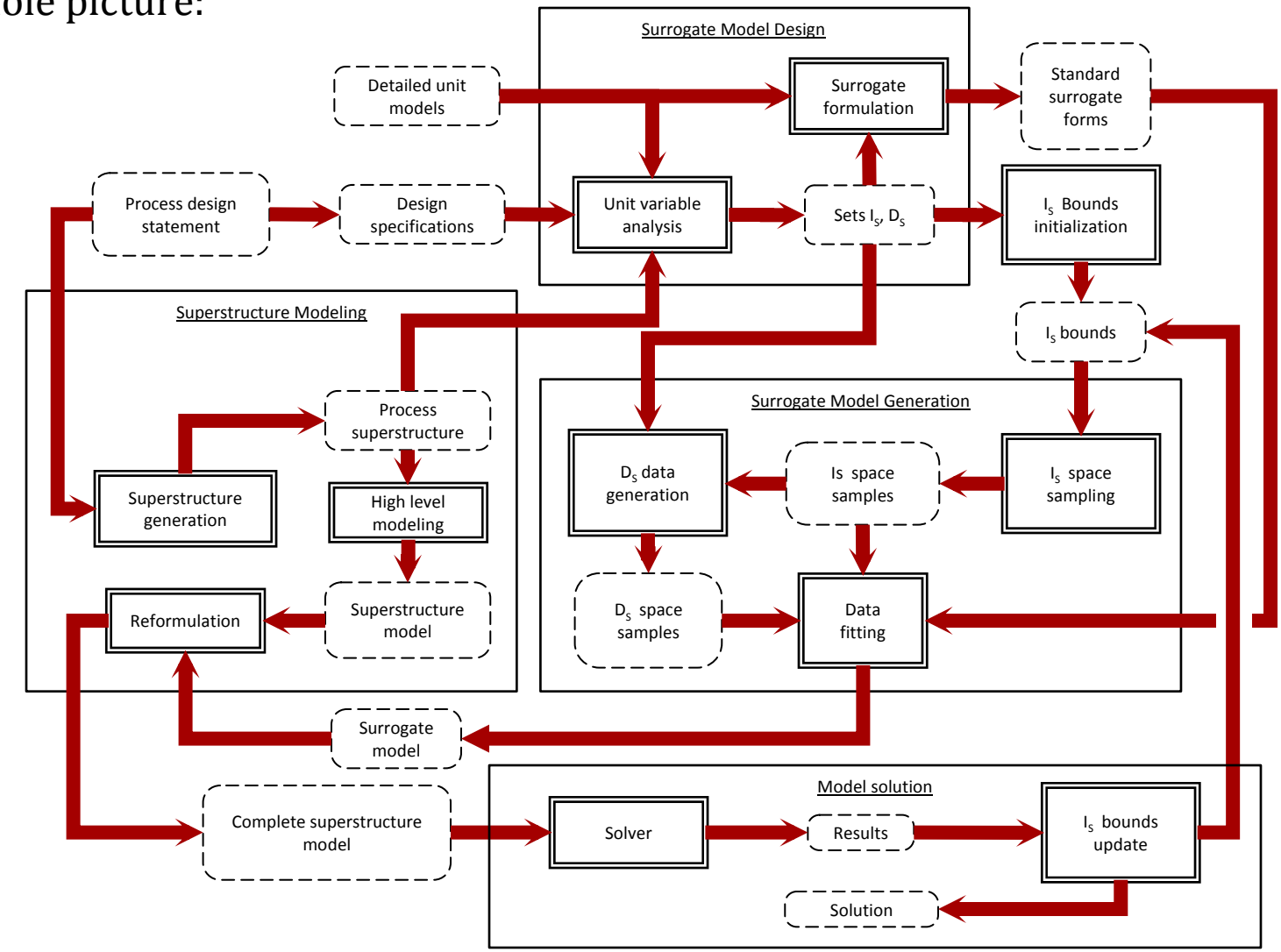

Motivation

- Synthesis of methanol in a fixed bed multi-tube reactor:
  - Reactions

$$CO_2 + 3 \cdot H_2 \rightarrow MeOH + H_2O \quad (MSR)$$
$$CO + H_2O \rightarrow CO_2 + H_2 \quad (WGS)$$

  - Reactor model:
    - Adiabatic operation,
    - Total radial mix,
    - No axial diffusion,
    - Pressure drop as per Ergun,
    - Real mixture thermodynamics.

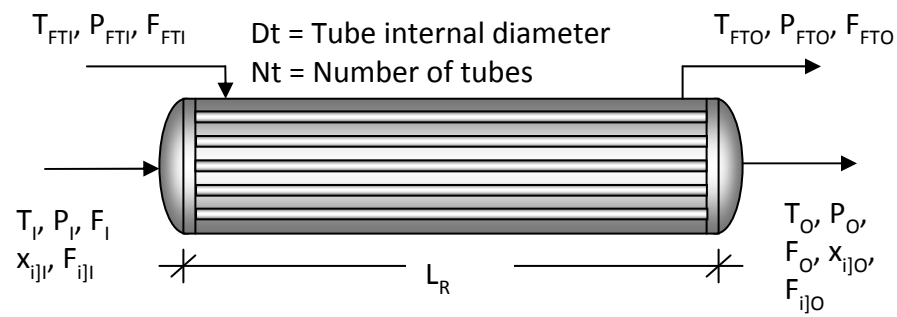

Mass Balances

$$\frac{dF_i}{dV_R} = \sum_{j=1}^{NR} a_{ij} \cdot r_j = \frac{dF_i}{As_R \cdot d(L)}, \quad i = 1,\ldots,NC$$
$$\frac{dF_{i]FT}}{dL} = 0 \quad i = 1,\ldots,NC$$

Energy balances

$$q \cdot \Omega_R \cdot dL = d(F \cdot h)$$
$$q \cdot \Omega_R \cdot dL = -d(F_{FT} \cdot h_{FT})$$

Kinetics

$$r_j = f(C_1,\ldots,C_{NC},T) \qquad j = 1,\ldots,NR$$
$$C_i = F_i / (F \cdot v) \qquad i = 1,\ldots,NC$$

Heat transfer

$$q = U \cdot (T_{FT} - T)$$

Geometry

$$V_R = N_t \frac{\pi D_t^2}{4} L_R$$
$$\Omega_R = N_t \cdot \pi \cdot D_t$$
$$As_R = N_t \cdot \frac{\pi D_t^2}{4}$$

Hydraulics

$$\frac{dP}{dL} = -\frac{1}{1000} \cdot \frac{\rho \cdot \upsilon_s^2 \cdot (1-\varepsilon)}{\varphi_p \cdot D_p \cdot \varepsilon^3} \cdot \left(\frac{150 \cdot (1-\varepsilon)}{\mathrm{Re}_p} + 1.75 \right)$$

where

$$\mathrm{Re}_p = \frac{\varphi_p \cdot D_p \cdot \upsilon_s \cdot \rho}{\mu}, \quad \upsilon_s = \frac{F \cdot v}{As_R}$$
$$\rho = \sum_{i=1}^{NC} (x_i \cdot M_i) / v$$

$$\frac{dP_{FT}}{dL} = \frac{\Delta P_{FT}}{L_R}$$

$F - F_i - x_i$ relations

$$F = \sum_{i=1}^{NC} F_i, \quad x_i = \frac{F_i}{F}$$
$$F_{FT} = \sum_{i=1}^{NC} F_{i]FT}, \quad x_{i]FT} = \frac{F_{i]FT}}{F_{FT}}, \quad i = 1,\ldots,NC$$

Thermo and transport properties

$$h = f(T, P, x_1,\ldots,x_{NC})$$
$$h_{FT} = f(T_{FT}, P_{FT}, x_{1]FT},\ldots,x_{NC]FT})$$
$$v = f(T, P, x_1,\ldots,x_{NC})$$
$$\mu = f(T, P, x_1,\ldots,x_{NC})$$

r_j – reaction rate
h – molar enthalpy
v – molar volume
μ - viscosity

Motivation

- What we really need is a mapping: *f*: inputs → outputs

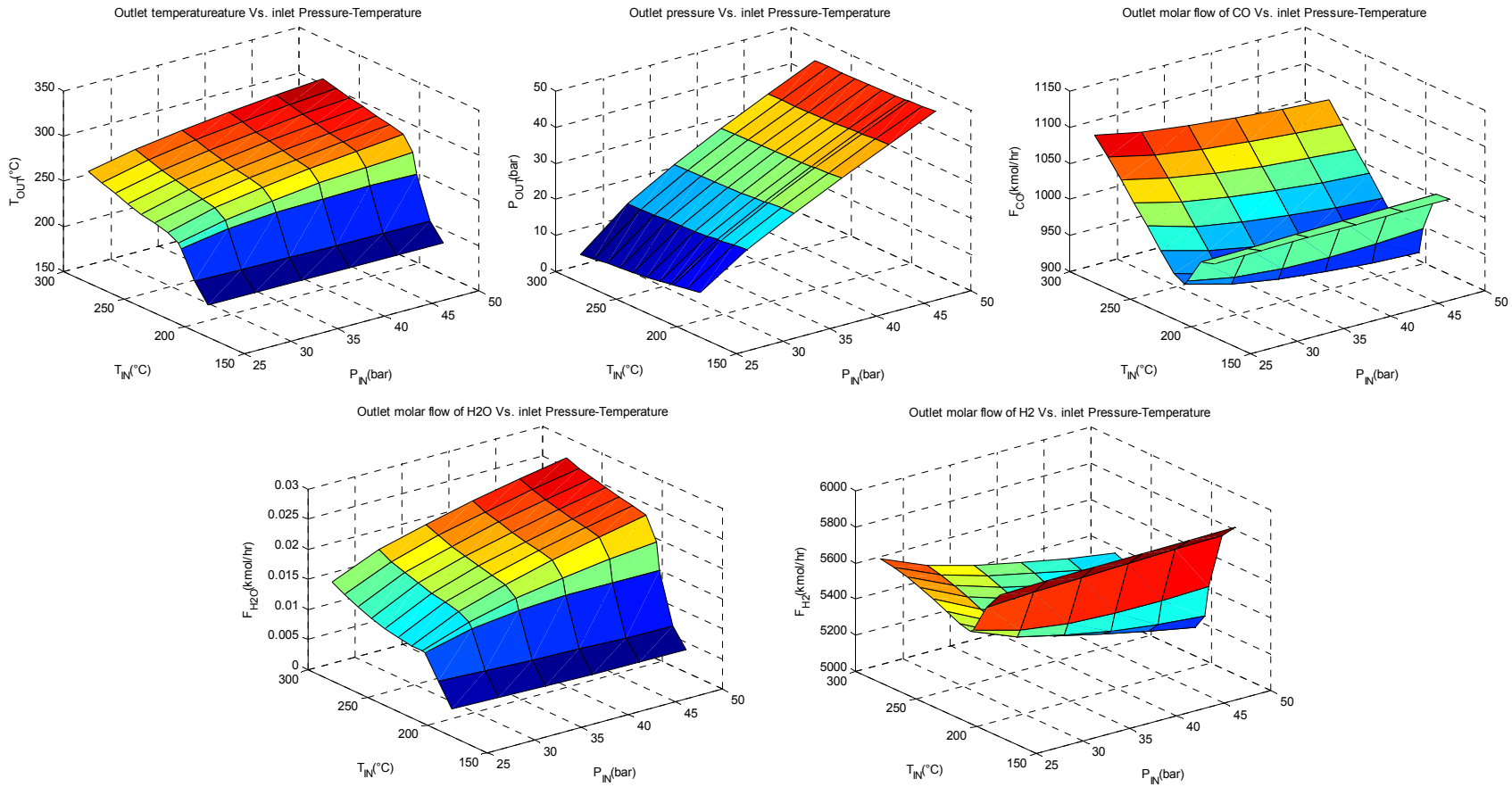

Our approach: Replace complex unit models with surrogate models, relating only necessary variables while enforcing the same constraints

Surrogate Model Design

- *First-principles* unit model:
  - $\mathbf{I_{UM}}$: Independent variable set (degrees of freedom),
  - $\mathbf{D_{UM}}$: Dependent variable set,
  - $\mathbf{C_{UM}}$: Connecting variable set (variables appearing in any other part of the problem),
  - $\mathbf{F_{UM}}$: Fixed variable set (design specifications),

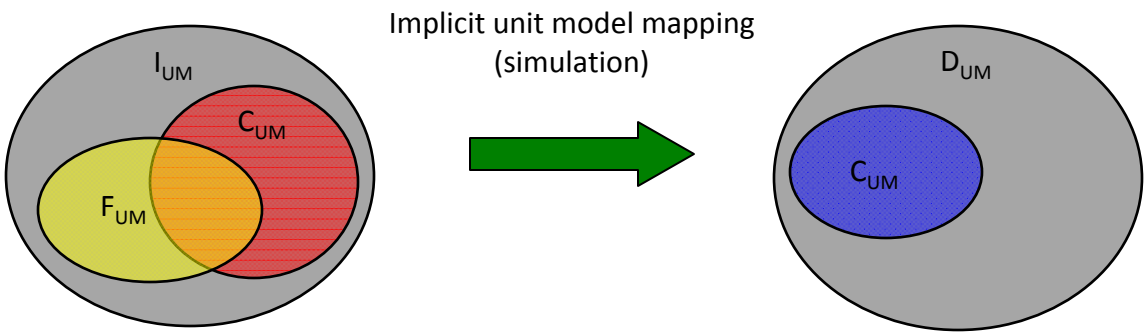

- *Surrogate* unit model:
  Enforce constraints between independent and connecting dependent variables
  - $\mathbf{I_S}$: Independent variable set, $\mathbf{I_S = I_{UM} \setminus F_{UM}}$
  - $\mathbf{D_S}$: Dependent variable set, $\mathbf{D_S = C_{UM} \cap D_{UM} = C_{UM} \setminus I_{UM}}$

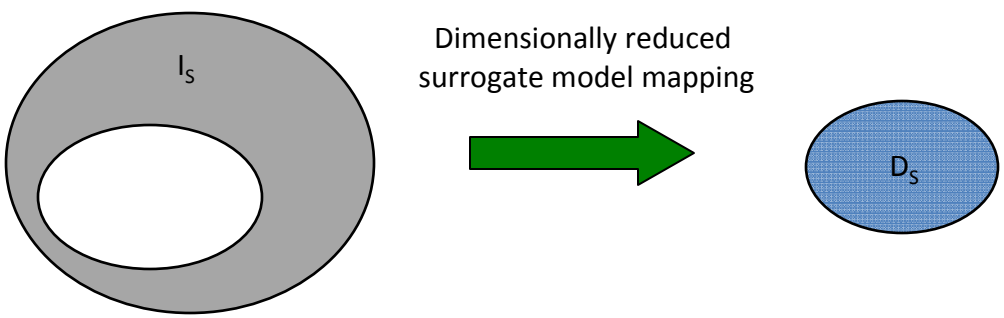

Surrogate Model Design

- Fixed ($\mathbf{F_{UM}}$) and connecting ($\mathbf{C_{UM}}$) variables are given from problem are given
- There are multiple choices for independent ($\mathbf{I_{UM}}$) variables
- Structurally non-singular model: perfect matching between dependent variables and equations†

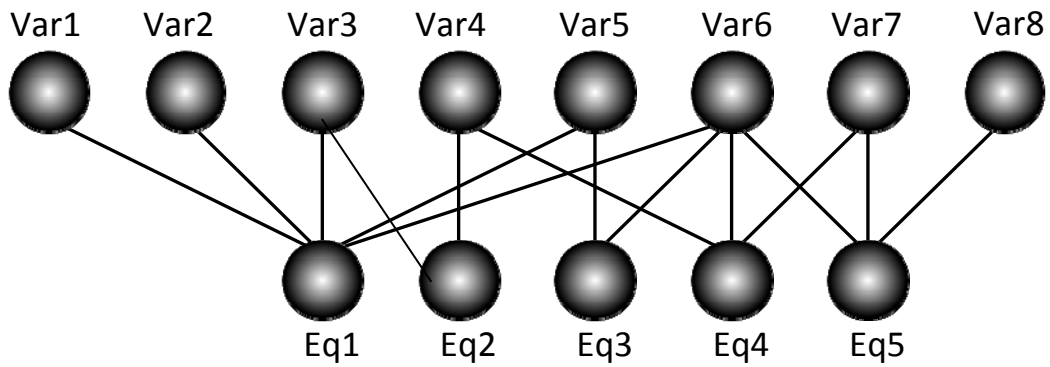

Unit model bipartite representation

- Matching problem:
  - **J**: Set of variables,
  - **K**: Set of equations,
  - **A**: Variable-equation incidence matrix,
  - x_{jk} : Variable-equation matching variables
  - y_j : Selection binaries defining $\mathbf{I_{UM}}$
  - w_j : Selection preference coefficients

$$\max \sum_{j \in J} w_j \cdot y_j$$

$$s.t. \left| \begin{array}{ll} \sum_{j:(j,k)\in \mathbf{A}} x_{jk} = 1 & \forall k \in \mathbf{K} \\ \sum_{k:(j,k)\in \mathbf{A}} x_{jk} = 1 - y_j & \forall j \in \mathbf{J} \\ x_{jk}, y_j \in \{0,1\} & \end{array} \right.$$

- Since $\mathbf{F_{UM}} \subset \mathbf{I_{UM}} \Rightarrow y_j = 1,\ \forall j \in \mathrm{F_{UM}}$
- Selection preferences *to reduce number of surrogate variables;* include connecting ($\mathbf{C_{UM}}$) in $\mathbf{I_{UM}}$

$$\left| \begin{array}{l} \mathbf{I_S} = \mathbf{I_{UM}} \setminus \mathbf{F_{UM}} \\ \mathbf{D_S} = \mathbf{C_{UM}} \setminus \mathbf{I_{UM}} \end{array} \right. \Rightarrow \left| \begin{array}{l} |\mathbf{I_S}| = |\mathbf{I_{UM}}| - |\mathbf{F_{UM}}| \\ |\mathbf{D_S}| = |\mathbf{C_{UM}}| - |\mathbf{C_{UM}} \cap \mathbf{I_{UM}}| \end{array} \right. \Rightarrow w_j >> 1 \ \ \forall j \in \mathbf{C_{UM}}$$

† Bunus P. Fritzson P. *Sim Tran Soc Mod & Sim Int* 2004; 80: 321

Surrogate Model Design

- Fixed ($\mathbf{F_{UM}}$) and connecting ($\mathbf{C_{UM}}$) variables are given from problem are given
- There are multiple choices for independent ($\mathbf{I_{UM}}$) variables
- Structurally non-singular model: perfect matching between dependent variables and equations†

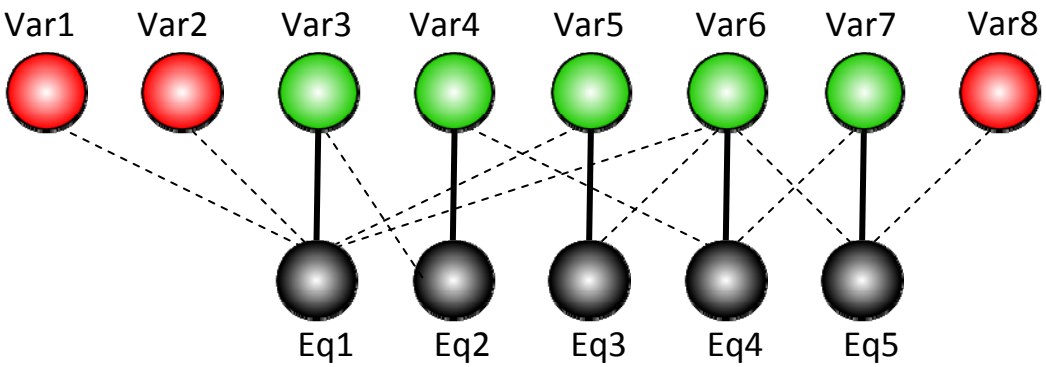

Perfect matching between eqs. and $\mathbf{D_{UM}}$ variables

- Matching problem:
  - **J**: Set of variables,
  - **K**: Set of equations,
  - **A**: Variable-equation incidence matrix,
  - x_{jk} : Variable-equation matching variables
  - y_j : Selection binaries defining $\mathbf{I_{UM}}$
  - w_j : Selection preference coefficients

$$\max \sum_{j \in J} w_j \cdot y_j$$

$$s.t. \left| \begin{array}{ll} \sum_{j:(j,k)\in \mathbf{A}} x_{jk} = 1 & \forall k \in \mathbf{K} \\ \sum_{k:(j,k)\in \mathbf{A}} x_{jk} = 1 - y_j & \forall j \in \mathbf{J} \\ x_{jk}, y_j \in \{0,1\} & \end{array} \right.$$

- Since $\mathbf{F_{UM}} \subset \mathbf{I_{UM}} \Rightarrow y_j = 1,\ \forall j \in \mathrm{F_{UM}}$
- Selection preferences *to reduce number of surrogate variables;* include connecting ($\mathbf{C_{UM}}$) in $\mathbf{I_{UM}}$

$$\left| \begin{array}{l} \mathbf{I_S} = \mathbf{I_{UM}} \setminus \mathbf{F_{UM}} \\ \mathbf{D_S} = \mathbf{C_{UM}} \setminus \mathbf{I_{UM}} \end{array} \right. \Rightarrow \left| \begin{array}{l} |\mathbf{I_S}| = |\mathbf{I_{UM}}| - |\mathbf{F_{UM}}| \\ |\mathbf{D_S}| = |\mathbf{C_{UM}}| - |\mathbf{C_{UM}} \cap \mathbf{I_{UM}}| \end{array} \right. \Rightarrow w_j >> 1 \ \ \forall j \in \mathbf{C_{UM}}$$

† Bunus P. Fritzson P. *Sim Tran Soc Mod & Sim Int* 2004; 80: 321

Surrogate Model Design: Example

- Optimal design and operation of a homogeneous CSTR with fixed feed and $\underline{\Delta}$P

CSTRoptimization problem

$$\max \quad f_{Obj}\left(F_{c*,o}, V_R, Q_R\right)$$

$$s.t. \quad \left| \begin{array}{l} f_{CSTR}(\ldots) = 0 \\ T_O \le T_{\max} \end{array} \right.$$

CSTRdetailed model

Mass balances

$$F_{c,I} + V_R \cdot \sum_{r \in \mathbf{R}} \left(v_{r,c} \cdot r_r\right) = F_{c,O} \quad , \quad \left| \forall c \in \mathbf{C} \right.$$

Energy balance

$$h_I \cdot \left(\sum_{c \in \mathbf{R}} F_{c,I}\right) + Q_R = h_O \cdot \left(\sum_{c \in \mathbf{R}} F_{c,O}\right)$$

Additional expressions

$$P_I - \underline{\Delta} P_R = P_O$$

$$r_r = f^{r_r}\left(T_O, \left[C_{c,O}\right]_{\forall c \in \mathbf{C}}\right) \quad , \quad \left| \forall r \in \mathbf{R} \right.$$

$$x_{c,I} \cdot \left(\sum_{c \in \mathbf{R}} F_{c,I}\right) = F_{c,I} \quad , \quad x_{c,O} \cdot \left(\sum_{c \in \mathbf{R}} F_{c,O}\right) = F_{c,O} \quad , \quad \left| \forall c \in \mathbf{C} \right.$$

$$C_{c,O} = x_{c,O} / \upsilon_O$$

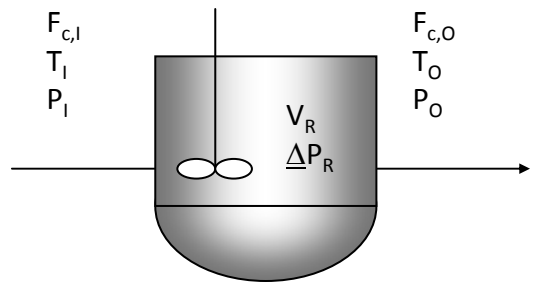

Thermodynamics

$$h_I = f^{h_I}\left(T_I, P_I, \left[x_{c,I}\right]_{\forall c \in \mathbf{C}}\right)$$

$$h_O = f^{h_O}\left(T_O, P_O, \left[x_{c,O}\right]_{\forall c \in \mathbf{C}}\right)$$

$$\upsilon_O = f^{\upsilon_O}\left(T_O, P_O, \left[x_{c,O}\right]_{\forall c \in \mathbf{C}}\right)$$

$$\mathbf{F_{UM}} = \left\{T_I, P_I, \left[F_{c,I}\right]_{\forall c \in \mathbf{C}}, \underline{\Delta} P_R\right\}$$

$$\mathbf{C_{UM}} = \left\{T_O, F_{c*,O}, V_R, Q_R\right\}$$

$$\mathbf{I_{UM}} = \left\{T_I, P_I, \left[F_{c,I}\right]_{\forall c \in \mathbf{C}}, \underline{\Delta} P_R, V_R, T_O\right\}$$

$$\mathbf{D_S} = \left\{F_{c*,O}, Q_R\right\}$$

$$\mathbf{I_S} = \left\{V_R, T_O\right\}$$

Surrogate Model Formulations

- We assume $\mathbf{F_{UM}} = \emptyset$,
- General considerations for $\mathbf{I_{UM}}$, $\mathbf{C_{UM}}$
- Incorporate linear equations of the original unit models:

Stream Mixers

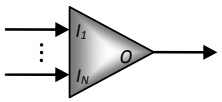

Mass balances

$$\sum_{s\in\mathbf{S}_u^{\mathbf{I}}} F_{c,s} = \sum_{s'\in\mathbf{S}_u^{\mathbf{O}}} F_{c,s'} \quad , \quad \left| \begin{array}{l} \forall u \in \mathbf{U}^{\mathbf{M}} \\ \forall c \in \mathbf{C} \end{array} \right.$$

Additional expressions

$$\min_{s\in\mathbf{S}_u^{\mathbf{I}}}(P_s) = P_{s'} \quad , \quad \left| \begin{array}{l} \forall u \in \mathbf{U}^{\mathbf{M}} \\ \forall s' \in \mathbf{S}_u^{\mathbf{O}} \end{array} \right.$$

Multivariable mapping

$$T_{s'} = \mathrm{f}_{s',u}^{T}\left(\left[F_{c,s}, T_s, P_s \right]_{\substack{c\in\mathbf{C} \\ s\in\mathbf{S}_u^{\mathbf{I}}}} \right) \quad , \quad \left| \begin{array}{l} \forall u \in \mathbf{U}^{\mathbf{M}} \\ \forall s' \in \mathbf{S}_u^{\mathbf{O}} \end{array} \right.$$

Stream Splitters

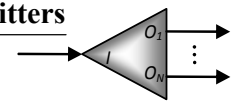

Mass balances

$$F_{c,s} \cdot \xi_{s',u} = F_{c,s'} \quad , \quad \left| \begin{array}{l} \forall u \in \mathbf{U}^{\mathbf{S}} \\ \forall s \in \mathbf{S}_u^{\mathbf{I}} \\ \forall s' \in \mathbf{S}_u^{\mathbf{O}} \\ \forall c \in \mathbf{C} \end{array} \right.$$

$$\sum_{s'\in\mathbf{S}_u^{\mathbf{O}}} \xi_{s',u} = 1 \quad , \quad \left| \begin{array}{l} \forall u \in \mathbf{U}^{\mathbf{S}} \end{array} \right.$$

Additional expressions

$$\begin{array}{l} P_s = P_{s'} \\ T_s = T_{s'} \end{array} \quad , \quad \left| \begin{array}{l} \forall u \in \mathbf{U}^{\mathbf{S}} \\ \forall s \in \mathbf{S}_u^{\mathbf{I}} \\ \forall s' \in \mathbf{S}_u^{\mathbf{O}} \end{array} \right.$$

Compressors – Pumps – Turbines

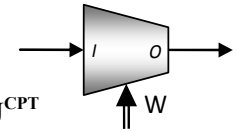

Mass balances

$$\sum_{s\in\mathbf{S}_u^{\mathbf{I}}} F_{c,s} = \sum_{s'\in\mathbf{S}_u^{\mathbf{O}}} F_{c,s'} \quad , \quad \left| \begin{array}{l} \forall u \in \mathbf{U}^{\mathbf{CPT}} \\ \forall c \in \mathbf{C} \end{array} \right.$$

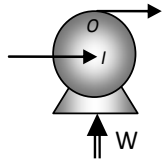

Additional expressions

$$P_s + \Delta P_u = P_{s'} \quad , \quad \left| \begin{array}{l} \forall u \in \mathbf{U}^{\mathbf{CPT}} \\ \forall s \in \mathbf{S}_u^{\mathbf{I}} \\ \forall s' \in \mathbf{S}_u^{\mathbf{O}} \end{array} \right.$$

Multivariable mapping

$$T_{s'} = \mathrm{f}_{s',u}^{T}\left(\left[F_{c,s}, T_s, P_s \right]_{\substack{c\in\mathbf{C} \\ s\in\mathbf{S}_u^{\mathbf{I}}}}, \Delta P_u, \varepsilon_u \right) \quad , \quad \left| \begin{array}{l} \forall u \in \mathbf{U}^{\mathbf{CPT}} \\ \forall s' \in \mathbf{S}_u^{\mathbf{O}} \end{array} \right.$$

$$W_u = \mathrm{f}_u^{W}\left(\left[F_{c,s}, T_s, P_s \right]_{\substack{c\in\mathbf{C} \\ s\in\mathbf{S}_u^{\mathbf{I}}}}, \Delta P_u, \varepsilon_u \right) \quad , \quad \left| \begin{array}{l} \forall u \in \mathbf{U}^{\mathbf{CPT}} \end{array} \right.$$

Surrogate Model Formulations

- We assume $\mathbf{F_{UM}} = \emptyset$,
- General considerations for $\mathbf{I_{UM}}$, $\mathbf{C_{UM}}$
- Incorporate linear equations of the original unit models:

Expansion Valves

Mass balances

$$\sum_{s \in \mathbf{S}_u^{\mathbf{I}}} F_{c,s} = \sum_{s' \in \mathbf{S}_u^{\mathbf{O}}} F_{c,s'} \quad , \quad \left| \begin{array}{l} \forall u \in \mathbf{U}^{\mathbf{EV}} \\ \forall c \in \mathbf{C} \end{array} \right.$$

Additional expressions

$$P_s - \underline{\Delta} P_u = P_{s'} \quad , \quad \left| \begin{array}{l} \forall u \in \mathbf{U}^{\mathbf{EV}} \\ \forall s \in \mathbf{S}_u^{\mathbf{I}} \\ \forall s' \in \mathbf{S}_u^{\mathbf{O}} \end{array} \right.$$

Multivariable mapping

$$T_{s'} = \mathrm{f}_{s',u}^{T}\left(\left[F_{c,s}, T_s, P_s \right]_{\substack{c \in \mathbf{C} \\ s \in \mathbf{S}_u^{\mathbf{I}}}}, \underline{\Delta} P_u \right) \quad , \quad \left| \begin{array}{l} \forall u \in \mathbf{U}^{\mathbf{EV}} \\ \forall s' \in \mathbf{S}_u^{\mathbf{O}} \end{array} \right.$$

Heaters-Coolers

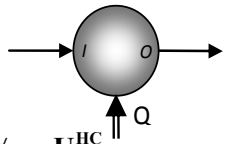

Mass balances

$$\sum_{s \in \mathbf{S}_u^{\mathbf{I}}} F_{c,s} = \sum_{s' \in \mathbf{S}_u^{\mathbf{O}}} F_{c,s'} \quad , \quad \left| \begin{array}{l} \forall u \in \mathbf{U}^{\mathbf{HC}} \\ \forall c \in \mathbf{C} \end{array} \right.$$

Additional expressions

$$\begin{array}{l} P_s - \underline{\Delta} P_u = P_{s'} \\ T_u = T_{s'} \end{array} \quad , \quad \left| \begin{array}{l} \forall u \in \mathbf{U}^{\mathbf{HC}} \\ \forall s \in \mathbf{S}_u^{\mathbf{I}} \\ \forall s' \in \mathbf{S}_u^{\mathbf{O}} \end{array} \right.$$

Multivariable mapping

$$Q_u = \mathrm{f}_u^{Q}\left(\left[F_{c,s}, T_s, P_s \right]_{\substack{c \in \mathbf{C} \\ s \in \mathbf{S}_u^{\mathbf{I}}}}, T_u, \underline{\Delta} P_u \right) \quad , \quad \left| \forall u \in \mathbf{U}^{\mathbf{HC}} \right.$$

Flash Vessels

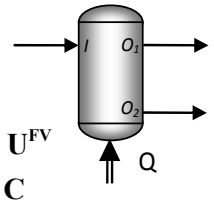

Mass balances

$$\sum_{s \in \mathbf{S}_u^{\mathbf{I}}} F_{c,s} = \sum_{s' \in \mathbf{S}_u^{\mathbf{O}}} F_{c,s'} \quad , \quad \left| \begin{array}{l} \forall u \in \mathbf{U}^{\mathbf{FV}} \\ \forall c \in \mathbf{C} \end{array} \right.$$

Additional expressions

$$\begin{array}{l} P_s - \underline{\Delta} P_u = P_{s'} \\ T_u = T_{s'} \end{array} \quad , \quad \left| \begin{array}{l} \forall u \in \mathbf{U}^{\mathbf{FV}} \\ \forall s \in \mathbf{S}_u^{\mathbf{I}} \\ \forall s' \in \mathbf{S}_u^{\mathbf{O}} \end{array} \right.$$

Multivariable mapping

$$F_{c,s'} = \mathrm{f}_{c,s',u}^{F}\left(\left[F_{c,s}, T_s, P_s \right]_{\substack{c \in \mathbf{C} \\ s \in \mathbf{S}_u^{\mathbf{I}}}}, \underline{\Delta} P_u, Q_u \right) \quad , \quad \left| \begin{array}{l} \forall u \in \mathbf{U}^{\mathbf{FV}} \\ \forall s' \in \left(\mathbf{S}_u^{\mathbf{O}} \setminus o_1 \right) \\ \forall c \in \mathbf{C} \end{array} \right.$$

$$T_u = \mathrm{f}_u^{T}\left(\left[F_{c,s}, T_s, P_s \right]_{\substack{c \in \mathbf{C} \\ s \in \mathbf{S}_u^{\mathbf{I}}}}, \underline{\Delta} P_u, Q_u \right) \quad , \quad \left| \forall u \in \mathbf{U}^{\mathbf{FV}} \right.$$

Surrogate Model Formulations

- We assume $\mathbf{F_{UM}} = \emptyset$,
- General considerations for $\mathbf{I_{UM}}$, $\mathbf{C_{UM}}$
- Incorporate linear equations of the original unit models:

Distillation Columns (Isobaric)

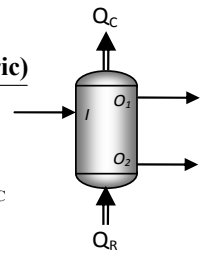

Mass balances

$$\sum_{s\in\mathbf{S}_u^{\mathbf{I}}} F_{c,s} = \sum_{s'\in\mathbf{S}_u^{\mathbf{O}}} F_{c,s'} \quad , \quad \left|\begin{array}{l}\forall u \in \mathbf{U}^{\mathbf{DC}} \\ \forall c \in \mathbf{C}\end{array}\right.$$

Additional expressions

$$P_s - \Delta P_u = P_{s'} \quad , \quad \left|\begin{array}{l}\forall u \in \mathbf{U}^{\mathbf{DC}} \\ \forall s \in \mathbf{S}_u^{\mathbf{I}} \\ \forall s' \in \mathbf{S}_u^{\mathbf{O}}\end{array}\right.$$

$$Tcond_u = T_{s'} \quad , \quad \left|\forall s' \in \left(\mathbf{S}_u^{\mathbf{O}} \setminus o_2\right)\right.$$

Complementary multivariable mapping

$$F_{c,s'} = \mathrm{f}^{F}_{c,s',u}\left(\begin{array}{l}\left[F_{c,s}, T_s, P_s\right]_{\substack{c\in\mathbf{C} \\ s\in\mathbf{S}_u^{\mathbf{I}}}}, \\ \Delta P_u, Nr_u, Ns_u, Tcond_u, Br_u\end{array}\right) \quad , \quad \left|\begin{array}{l}\forall u \in \mathbf{U}^{\mathbf{DC}} \\ \forall s' \in \left(\mathbf{S}_u^{\mathbf{O}} \setminus o_1\right) \\ \forall c \in \mathbf{C}\end{array}\right.$$

$$Q_{C\,u} = \mathrm{f}^{Q_C}_{u}\left(\begin{array}{l}\left[F_{c,s}, T_s, P_s\right]_{\substack{c\in\mathbf{C} \\ s\in\mathbf{S}_u^{\mathbf{I}}}}, \\ \Delta P_u, Nr_u, Ns_u, Tcond_u, Br_u\end{array}\right) \quad , \quad \left|\forall u \in \mathbf{U}^{\mathbf{DC}}\right.$$

$$Q_{R\,u} = \mathrm{f}^{Q_R}_{u}\left(\begin{array}{l}\left[F_{c,s}, T_s, P_s\right]_{\substack{c\in\mathbf{C} \\ s\in\mathbf{S}_u^{\mathbf{I}}}}, \\ \Delta P_u, Nr_u, Ns_u, Tcond_u, Br_u\end{array}\right) \quad , \quad \left|\forall u \in \mathbf{U}^{\mathbf{DC}}\right.$$

$$T_{s'} = \mathrm{f}^{T}_{s',u}\left(\begin{array}{l}\left[F_{c,s}, T_s, P_s\right]_{\substack{c\in\mathbf{C} \\ s\in\mathbf{S}_u^{\mathbf{I}}}}, \\ \Delta P_u, Nr_u, Ns_u, Tcond_u, Br_u\end{array}\right) \quad , \quad \left|\begin{array}{l}\forall u \in \mathbf{U}^{\mathbf{DC}} \\ \forall s' \in \left(\mathbf{S}_u^{\mathbf{O}} \setminus o_1\right)\end{array}\right.$$

Absorption Columns (Isobaric)

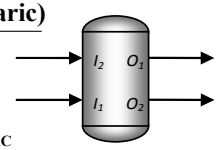

Mass balances

$$\sum_{s\in\mathbf{S}_u^{\mathbf{I}}} F_{c,s} = \sum_{s'\in\mathbf{S}_u^{\mathbf{O}}} F_{c,s'} \quad , \quad \left|\begin{array}{l}\forall u \in \mathbf{U}^{\mathbf{AC}} \\ \forall c \in \mathbf{C}\end{array}\right.$$

Additional expressions

$$\min_{s\in\mathbf{S}_u^{\mathbf{I}}}\left(P_s\right) - \Delta P_u = P_{s'} \quad , \quad \left|\begin{array}{l}\forall u \in \mathbf{U}^{\mathbf{AC}} \\ \forall s' \in \mathbf{S}_u^{\mathbf{O}}\end{array}\right.$$

Complementary multivariable mapping

$$F_{c,s'} = \mathrm{f}^{F}_{c,s',u}\left(\left[F_{c,s}, T_s, P_s\right]_{\substack{c\in\mathbf{C} \\ s\in\mathbf{S}_u^{\mathbf{I}}}}, \Delta P_u, Na_u\right) \quad , \quad \left|\begin{array}{l}\forall u \in \mathbf{U}^{\mathbf{AC}} \\ \forall s' \in \left(\mathbf{S}_u^{\mathbf{O}} \setminus o_1\right) \\ \forall c \in \mathbf{C}\end{array}\right.$$

$$T_{s'} = \mathrm{f}^{T}_{s',u}\left(\left[F_{c,s}, T_s, P_s\right]_{\substack{c\in\mathbf{C} \\ s\in\mathbf{S}_u^{\mathbf{I}}}}, \Delta P_u, Na_u\right) \quad , \quad \left|\begin{array}{l}\forall u \in \mathbf{U}^{\mathbf{AC}} \\ \forall s' \in \mathbf{S}_u^{\mathbf{O}}\end{array}\right.$$

Agregators - Disagregat ors

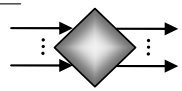

$$\sum_{s\in\mathbf{S}_u^{\mathbf{I}}} F_{c,s} = \sum_{s'\in\mathbf{S}_u^{\mathbf{O}}} F_{c,s'}$$

$$\sum_{s\in\mathbf{S}_u^{\mathbf{I}}} T_s = \sum_{s'\in\mathbf{S}_u^{\mathbf{O}}} T_{s'} \quad , \quad \left|\begin{array}{l}\forall u \in \mathbf{U}^{\mathbf{AD}} \\ \forall c \in \mathbf{C}\end{array}\right.$$

$$\sum_{s\in\mathbf{S}_u^{\mathbf{I}}} P_s = \sum_{s'\in\mathbf{S}_u^{\mathbf{O}}} P_{s'}$$

Reactors (Isotherma l)

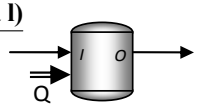

Mass balances

$$\sum_{s\in\mathbf{S}_u^{\mathbf{I}}} F_{c,s} + \sum_{r\in\mathbf{R}} v_{r,c} \cdot X_{r,u} = \sum_{s'\in\mathbf{S}_u^{\mathbf{O}}} F_{c,s'} \quad , \quad \left|\begin{array}{l}\forall u \in \mathbf{U}^{\mathbf{R}} \\ \forall c \in \mathbf{C}\end{array}\right.$$

Additional expression s

$$P_s - \Delta P_u = P_{s'} \quad , \quad \left|\begin{array}{l}\forall u \in \mathbf{U}^{\mathbf{R}} \\ \forall s \in \mathbf{S}_u^{\mathbf{I}} \\ \forall s' \in \mathbf{S}_u^{\mathbf{O}}\end{array}\right.$$

$$T_u = T_{s'} \quad , \quad \left|\right.$$

Complement ary multivaria ble mapping

$$Q_u = \mathrm{f}^{Q}_{u}\left(\begin{array}{l}\left[F_{c,s}, T_s, P_s\right]_{\substack{c\in\mathbf{C} \\ s\in\mathbf{S}_u^{\mathbf{I}}}}, \\ \Delta P_u, T_u, L_u, D_u\end{array}\right) \quad , \quad \left|\forall u \in \mathbf{U}^{\mathbf{R}}\right.$$

$$X_{r,u} = \mathrm{f}^{X}_{r,u}\left(\begin{array}{l}\left[F_{c,s}, T_s, P_s\right]_{\substack{c\in\mathbf{C} \\ s\in\mathbf{S}_u^{\mathbf{I}}}}, \\ \Delta P_u, T_u, L_u, D_u\end{array}\right) \quad , \quad \left|\begin{array}{l}\forall u \in \mathbf{U}^{\mathbf{R}} \\ \forall r \in \mathbf{R}\end{array}\right.$$

Data Generation and Training

- The framework can be used with any fitting method
  - Linear models: fit split fraction, extend of reaction, etc.
  - Shortcut methods: fit key parameters
- We use artificial neural network (ANN) surrogates:
  - Simple structure and excellent fitting capabilities.
  - *Reformulation properties*
  - Network with a total of *K* layers

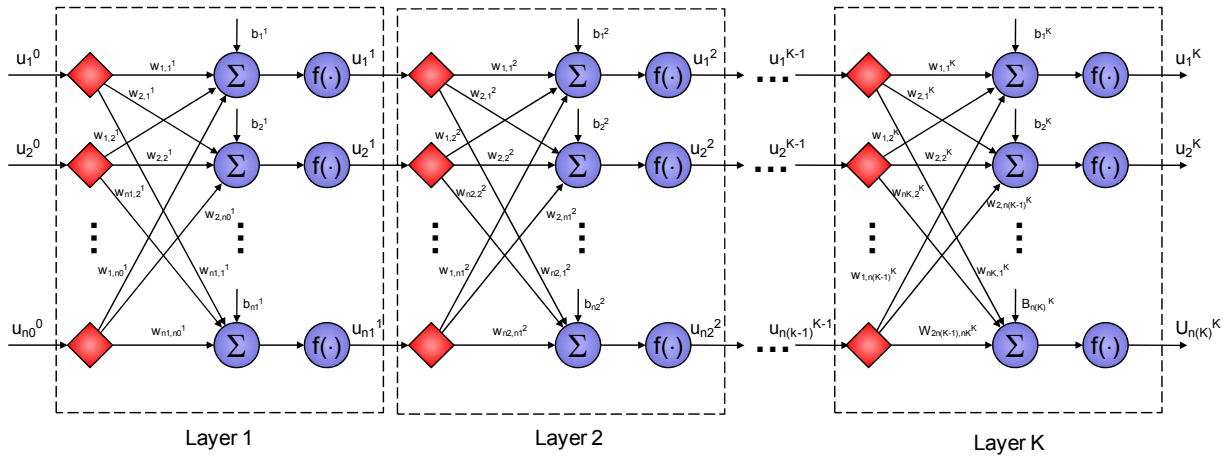

  - Formulation:
    u^0: network input
    u^K: network output

$$\boldsymbol{u}^k = \mathrm{f}^k\left(\boldsymbol{W}^k \cdot \boldsymbol{u}^{k-1} + \boldsymbol{b}^k\right), \quad k = 1,\ldots,K$$

where $\boldsymbol{u}^k$ = layer k output
$\boldsymbol{W}^k$ = layer k weight matrix
$\boldsymbol{b}^k$ = layer k bias vector
$\mathrm{f}^k(\cdot)$ = layer k activation function

Data Generation and Training

- Data generation and surrogate fitting using MATLAB – ASPEN Plus:

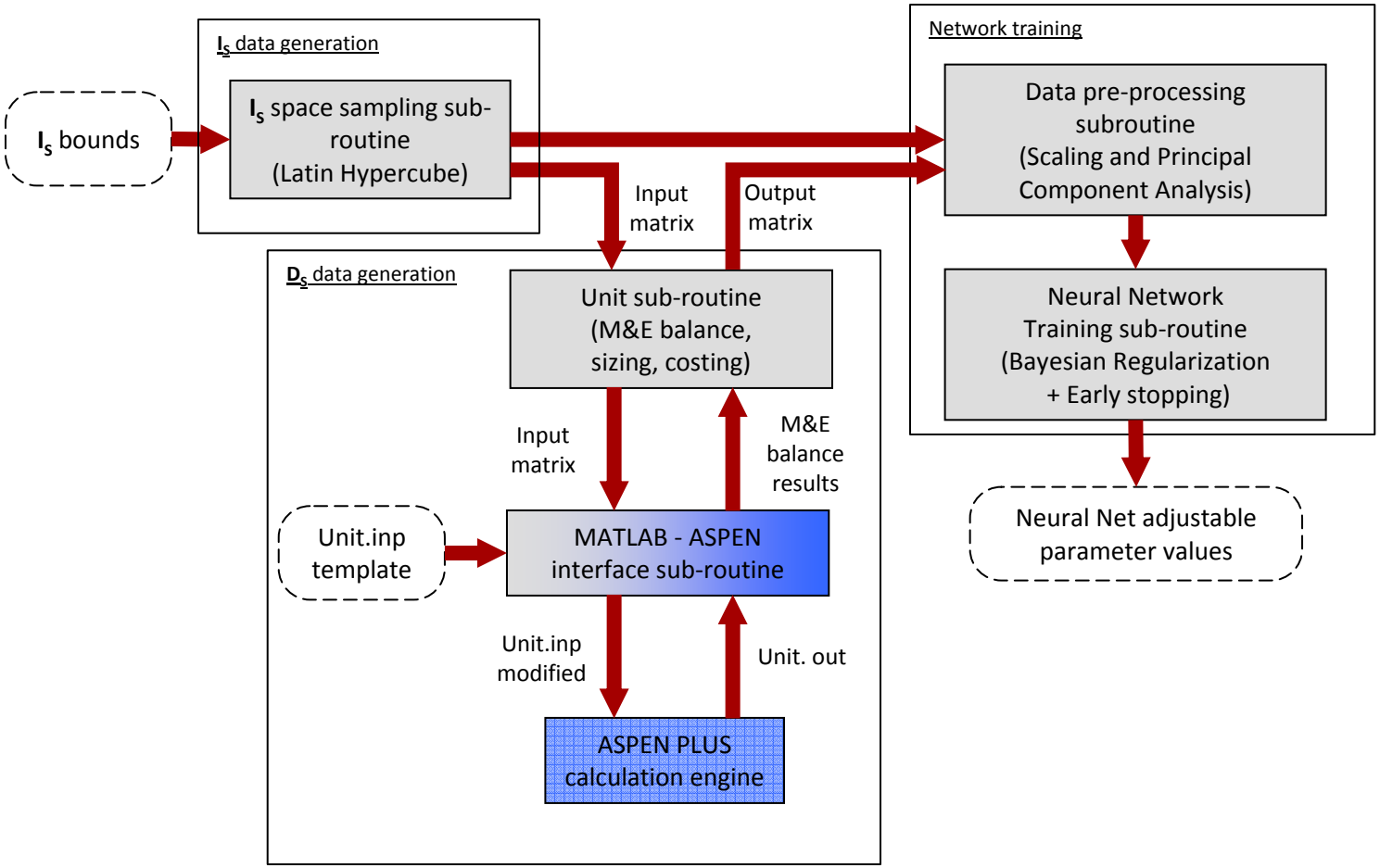

Data Generation and Training: Example 1

- Optimum design and operation of a homogeneous CSTR,
  - Production of Maleic Anhydride,

$$C_6H_6 + 4.5O_2 \rightarrow C_4H_2O_3 + 2CO_2 + 2H_2O$$
$$C_4H_2O_3 + 3O_2 \rightarrow 4CO_2 + H_2O$$
$$C_6H_6 + 7.5O_2 \rightarrow 6CO_2 + 3H_2O$$

  - Fixed feed $F_{c,I}$, T_I, P_I and pressure drop $\underline{\Delta}P$,
  - <u>Objective:</u> Find V_R and T_O maximizing profit

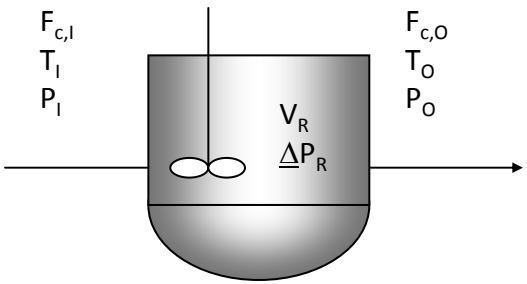

- Variable analysis:

$$\mathbf{F_{UM}} = \{T_I, P_I, [F_{c,I}]_{\forall c \in C}, \underline{\Delta}P_R\}$$
$$\mathbf{C_{UM}} = \{T_O, F_{c*,O}, V_R, Q_R\}$$
$$\mathbf{I_{UM}} = \{T_I, P_I, [F_{c,I}]_{\forall c \in C}, \underline{\Delta}P_R, V_R, T_O\}$$

$$\mathbf{D_S} = \{F_{c*,O}, Q_R\}$$
$$\mathbf{I_S} = \{V_R, T_O\}$$

Original model: $|\mathbf{I_{UM}}|+|\mathbf{D_{UM}}| = 45$, $|\mathbf{F_{UM}}| = 9$
Surrogate model: $|\mathbf{I_S}|+|\mathbf{D_S}| = 4$

- Surrogate: ANN with 2 hidden layers, 5 neurons each

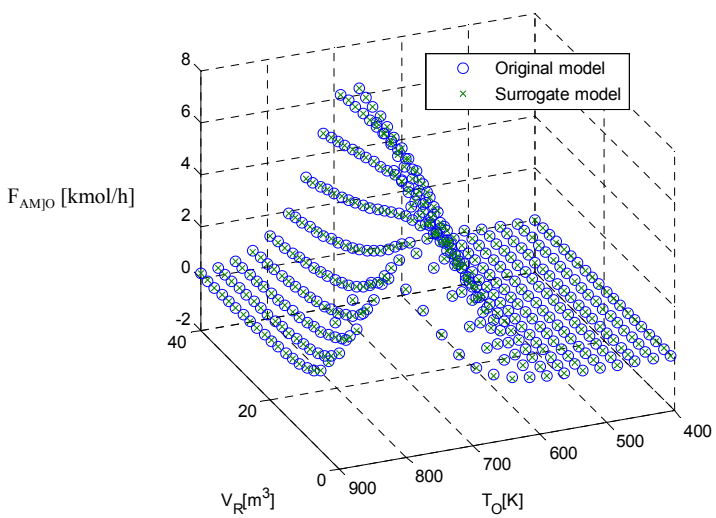

Optimum values:
- $T_O[K] = 670$
- $V_R[m^3] = 40$

Data Generation and Training: Example 2

- Solvent regeneration in amine based carbon capture
  - Detailed unit model (MESH) with ideal thermo package
  - Surrogate model: ANN fitting MESH-Amines thermo package
  - Fixed *Ns, Nr, Tcond*.
  - Variable analysis: $\mathbf{D}_S' = \{F_{c,O2}, c \in \mathbf{C}; Q_{Cu}; Q_{Ru}; T_{O1}\}$
    $\mathbf{I}_S = \{F_{c,s}, T_s, P_s, c \in \mathbf{C}, s \in \mathbf{S}_u^I; Br_u\}$

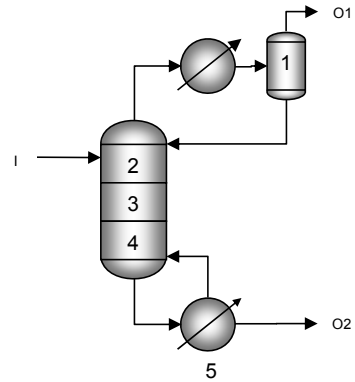

- Original unit model
  (MESH & ideal thermo pkg)

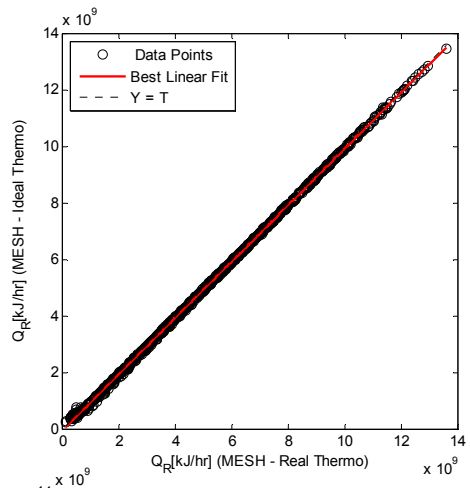

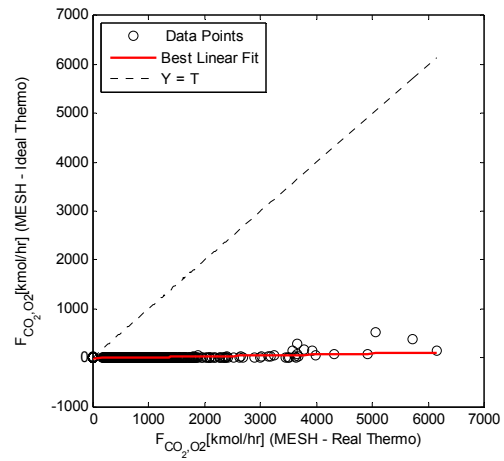

- ANN surrogate model
  (fitted with Amine pkg)

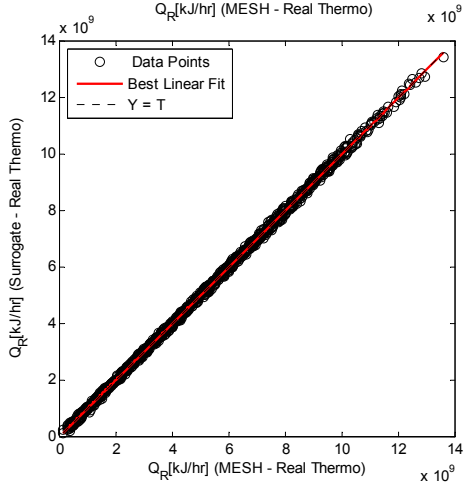

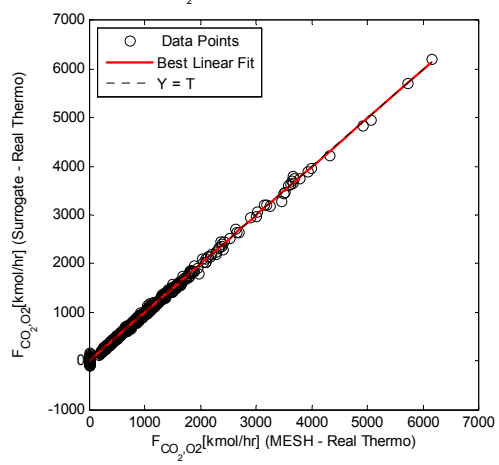

High-level Formulation Approach

- Generate superstructure (engineering judgment, artificial intelligence, evolutionary design)
- Choose method to activate/de-activate unit models
  - Math programming with equilibrium constraints (Biegler et al.)
  - Disjunctive programming (Grossmann et al.)

$$\begin{bmatrix} Y_u \\ h_u\left(\left[F_{c,s}, T_s, P_s\right]_{\substack{c\in\boldsymbol{C}\\ s\in\boldsymbol{S}_u}}, \boldsymbol{\psi}_u\right) = 0 \\ g_u\left(\left[F_{c,s}, T_s, P_s\right]_{\substack{c\in\boldsymbol{C}\\ s\in\boldsymbol{S}_u}}, \boldsymbol{\psi}_u\right) \le 0 \\ CC_u = \mathbf{f}_u^{CC}\left(\left[T_s, P_s\right]_{s\in\boldsymbol{S}_u}, \boldsymbol{\psi}_u\right) \\ OPC_u = \mathbf{f}_u^{COP}\left(\boldsymbol{\psi}_u\right) \end{bmatrix} \vee \begin{bmatrix} \neg Y_u & \\ F_{c,s} = 0 & \forall c \in \boldsymbol{C} \\ T_s = 0 & \forall s \in \boldsymbol{S}_u \\ P_s = 0 & \\ \boldsymbol{\psi}_u = 0 & \\ CC_u = 0 \quad , \quad OPC_u = 0 & \end{bmatrix} \quad \forall u \in \boldsymbol{U}^C$$

What next for Process Synthesis and Design?

Three major issues:

1. **Uncertainty:**
   Theory is available
   (stochastic programming, robust optimization, flexibility analysis)
   Major issue: computational

2. **Process intensification**
   Limited cases process flowsheets, microsytems
   Major issue: represenations

3. **Nonlinear process models**
   To support process synthesis with complex models
   Major issue: convergence

Process Intensification:
Original Methyl Acetate Flowsheet

Siirola (1988)

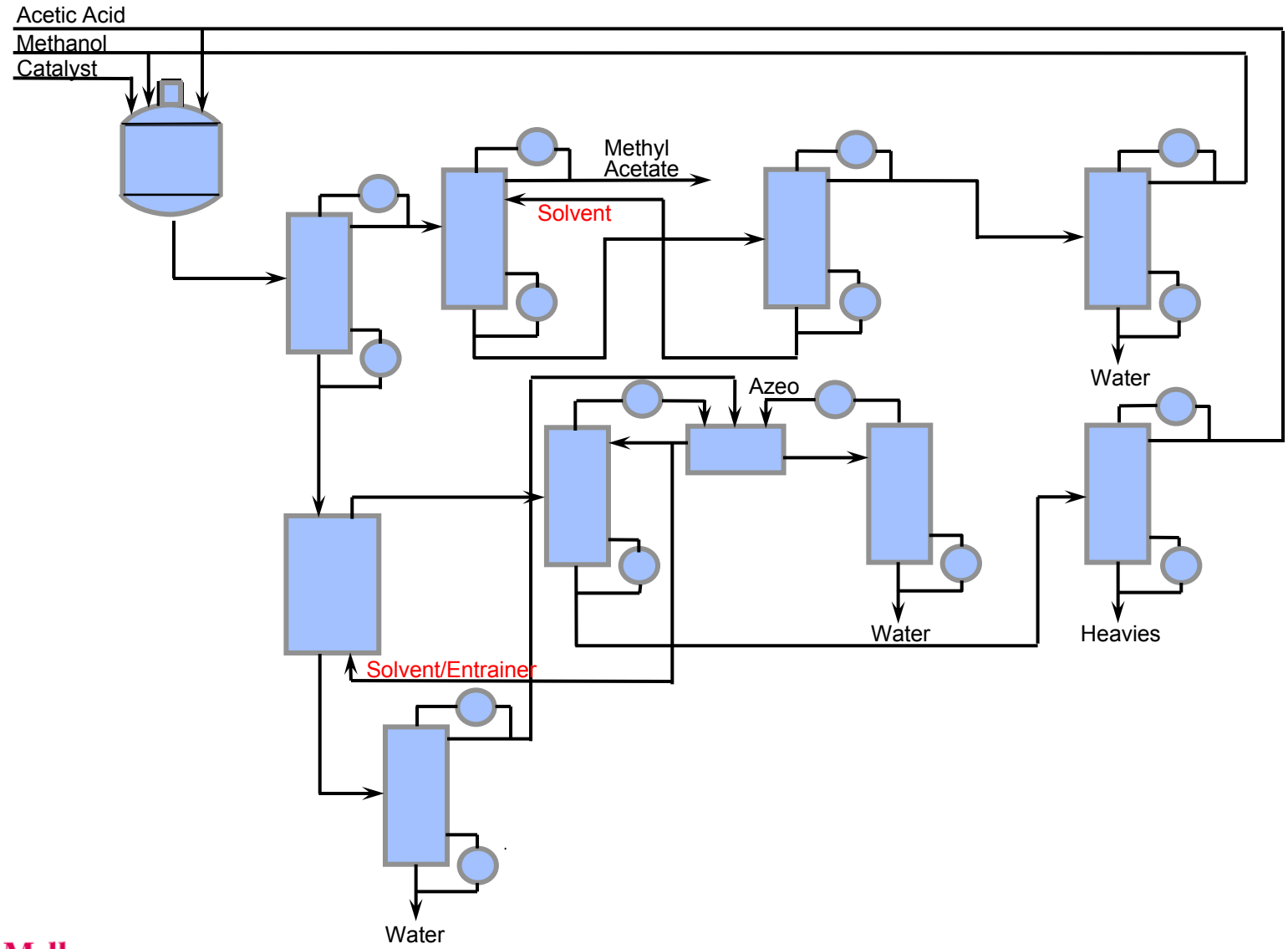

Process Intensification

Single Column Methyl Acetate Process

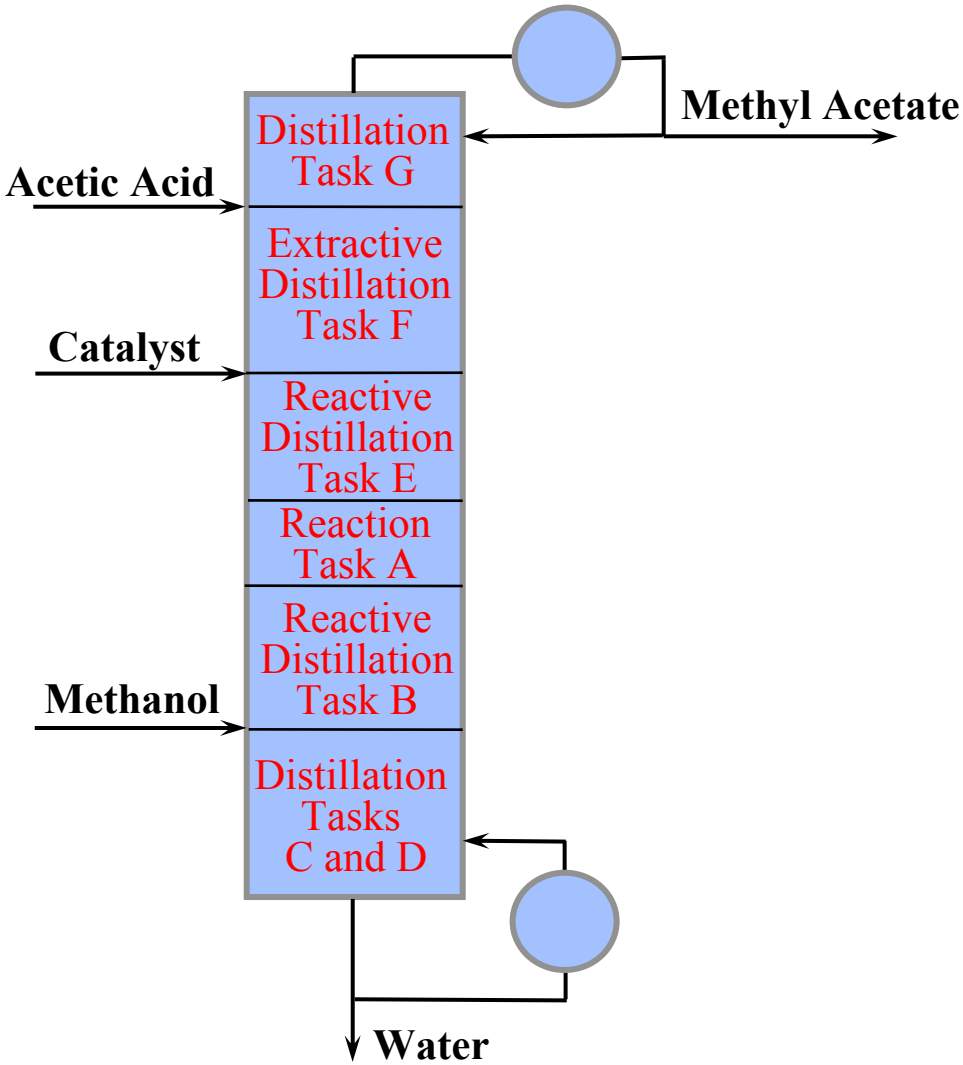

Synthesis Multiproduct Batch Plant

(Lee, Grossmann, 2000)

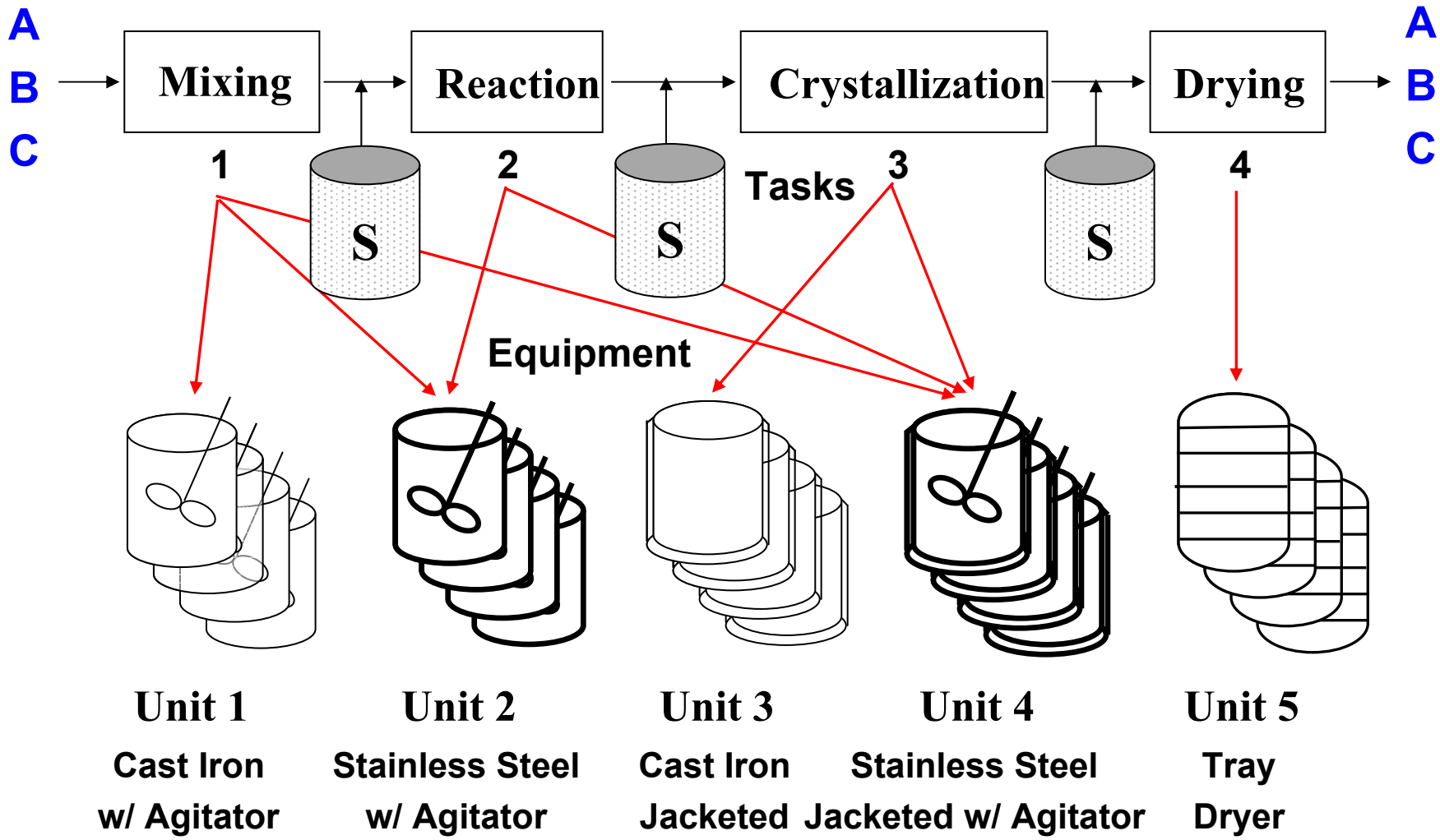

More than 100 alternatives: each requires nonlinear optimization

Synthesis Multiproduct Batch Plant

Nonconvex GDP Model

$$\min \boxed{\mathrm{COST} = \sum_{j=1}^{M} N_j^{EQ} C_j + \sum_j CS_j}$$

Objective function

$$s.t. \quad V_t^T \geq B_i S_{it} \quad i = 1,\ldots,N_P; t = 1,\ldots,T$$

Sizing

$$pt_{ij} = \sum_{t \in T_j} pty_{itj} \quad i = 1,\ldots,N_P; j = 1,\ldots,M$$

Process time

$$n_i B_i \geq Q_i \quad i = 1,\ldots,N_P$$

Demand

$$\boxed{\sum_{i=1}^{N_p} n_i T_{Li} \leq H}$$

Horizon time

$$\bigvee_{j \in J_t} \begin{bmatrix} Y_{tj} \\ V_j \geq V_t^T \\ pty_{itj} = pt_{it}^T \\ pty_{itj'} = 0, j' \neq j \end{bmatrix} \quad t \in T$$

Disjunction for Task Assignments

$\boxed{}$ **Nonconvex functions**

GDP model (continued)

$$\begin{bmatrix} YEX_j \\ \boxed{C_j = \gamma_j + \alpha_j V_j^{0.6}} \\ V_j^L \le V_j \le V_j^U \\ \begin{bmatrix} YC_{1j} \\ N_j^{EQ} = 1 \\ T_{Li} \ge pt_{ij} \end{bmatrix} \vee \begin{bmatrix} YC_{2j} \\ N_j^{EQ} = 2 \\ 2T_{Li} \ge pt_{ij} \end{bmatrix} \vee \begin{bmatrix} YC_{3j} \\ N_j^{EQ} = 3 \\ 3T_{Li} \ge pt_{ij} \end{bmatrix} \vee \begin{bmatrix} YC_{4j} \\ N_j^{EQ} = 4 \\ 4T_{Li} \ge pt_{ij} \end{bmatrix} \end{bmatrix} \vee \begin{bmatrix} \neg YEX_j \\ C_j = 0 \\ V_j = 0 \\ N_j^{EQ} = 0 \\ pt_{ij} = 0 \\ T_{Li} \ge 0 \end{bmatrix} \quad j \in J$$

Disjunction for Equipment

$$\begin{bmatrix} YS_j \\ -\phi \le B_{ij} - B_{ij'} \le \phi \\ VST_j \ge S'_{ij} B_{ij} NEQ_j \\ VST_j \ge S'_{ij} B_{ij'} NEQ_{j'} \\ 100 \le VST_j \le 10000 \\ \boxed{CS_j = 5000 + 80 VST_j^{0.5}} \end{bmatrix} \vee \begin{bmatrix} \neg YS_j \\ B_{ij} = B_{ij'} \\ VST_j = 0 \\ CS_j = 0 \end{bmatrix} \quad j \in J$$

Disjunction for Storage Tank

$$YEX_1 \Leftrightarrow Y_{11}, YEX_2 \Leftrightarrow Y_{12} \vee Y_{22}, YEX_3 \Leftrightarrow Y_{33}$$
$$YEX_4 \Leftrightarrow Y_{14} \vee Y_{24} \vee Y_{34}, YEX_5 \Leftrightarrow Y_{45}$$
$$W_{04} \underline{\vee} W_{14} \underline{\vee} W_{24} \underline{\vee} W_{34}$$
$$W_{04} \Leftrightarrow \neg Y_{14} \wedge \neg Y_{24} \wedge \neg Y_{34}$$
$$W_{14} \Leftrightarrow (Y_{14} \wedge \neg Y_{24} \wedge \neg Y_{34}) \underline{\vee} (\neg Y_{14} \wedge Y_{24} \wedge \neg Y_{34}) \underline{\vee} (\neg Y_{14} \wedge \neg Y_{24} \wedge Y_{34})$$
$$W_{24} \Leftrightarrow (Y_{14} \wedge Y_{24} \wedge \neg Y_{34}) \underline{\vee} (\neg Y_{14} \wedge Y_{24} \wedge Y_{34})$$
$$W_{34} \Leftrightarrow Y_{14} \wedge Y_{24} \wedge Y_{34}$$
$$0 \le C_j, V_j, V_t^T, n_i, B_i, T_{Li}, pt_{ij}, N_j^{EQ}, pty_{itj}; YEX_{tj}, Y_{tj}, YC_{cj}, W_{tj} \in \{true, false\}$$

Logic Propositions

Proposed Algorithm for Nonconvex GDP

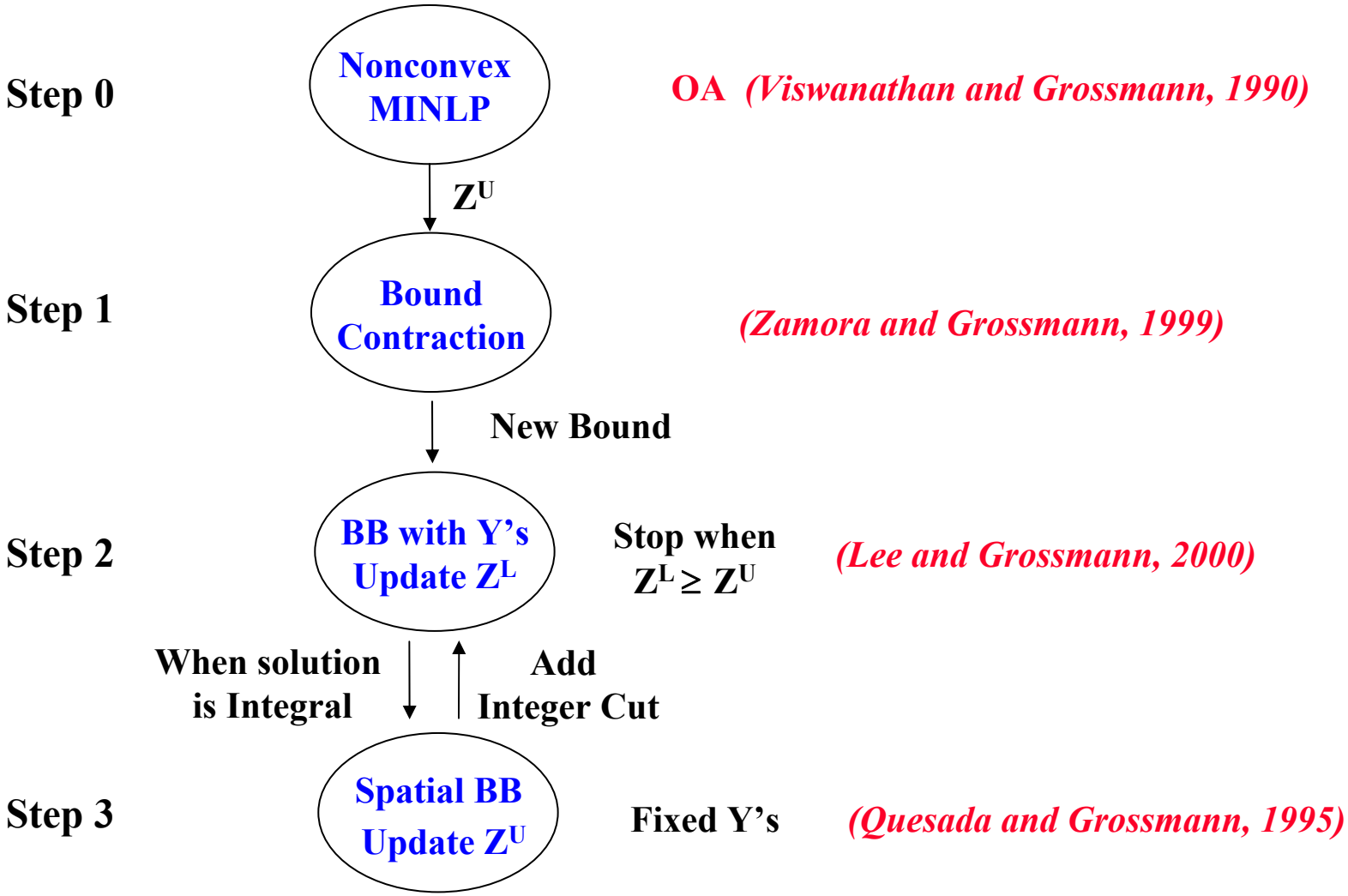

Step 2: Disjunctive Branch and Bound

- **Procedure** (Lee and Grossmann, 1999)
  - Relaxed NLP problem is solved.
  - Check Infeasibility of each term.
- **Branching Rule**
  - Select a term with Minimum Infeasibility first.
  - Logic Inference – fixes additional Boolean Variables.
- **Lower Bound is updated**
- When all the Boolean variables are fixed and the relaxation gap is nonzero:
  - switch to Spatial Branch and Bound.

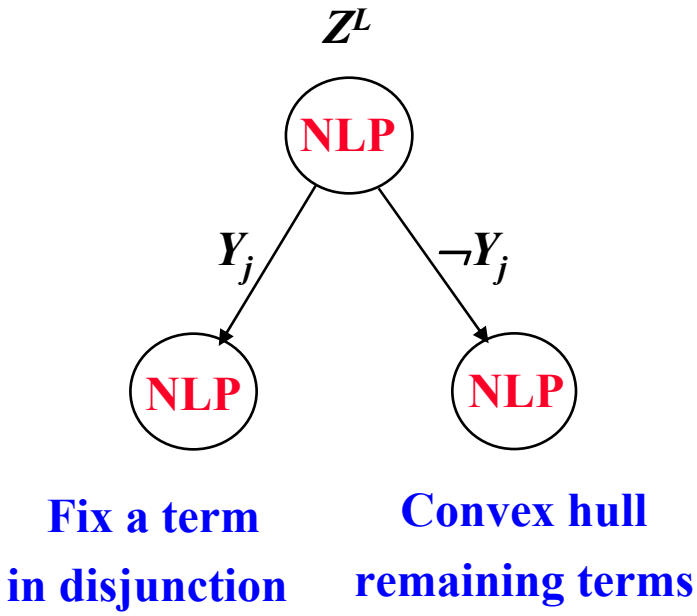

Step 3: Spatial Branch and Bound

- **Fixed Boolean Variables: Convex NLP**
  - Check the relaxation gap of each underestimator function.
  - Select the constraint with maximum gap.
  - Branch on a variable which causes the maximum gap.
  - Bisection Rule: Feasible region is divided into 2 subregions.
  - If the gap is small enough, an upper bound is updated.

- **Return to Step 2 with:**
  - Updated Global Upper Bound
  - Feasibility Cut, Z < GUB
  - Integer Cut for the chosen set of Y's

Quesada and Grossmann (1995)

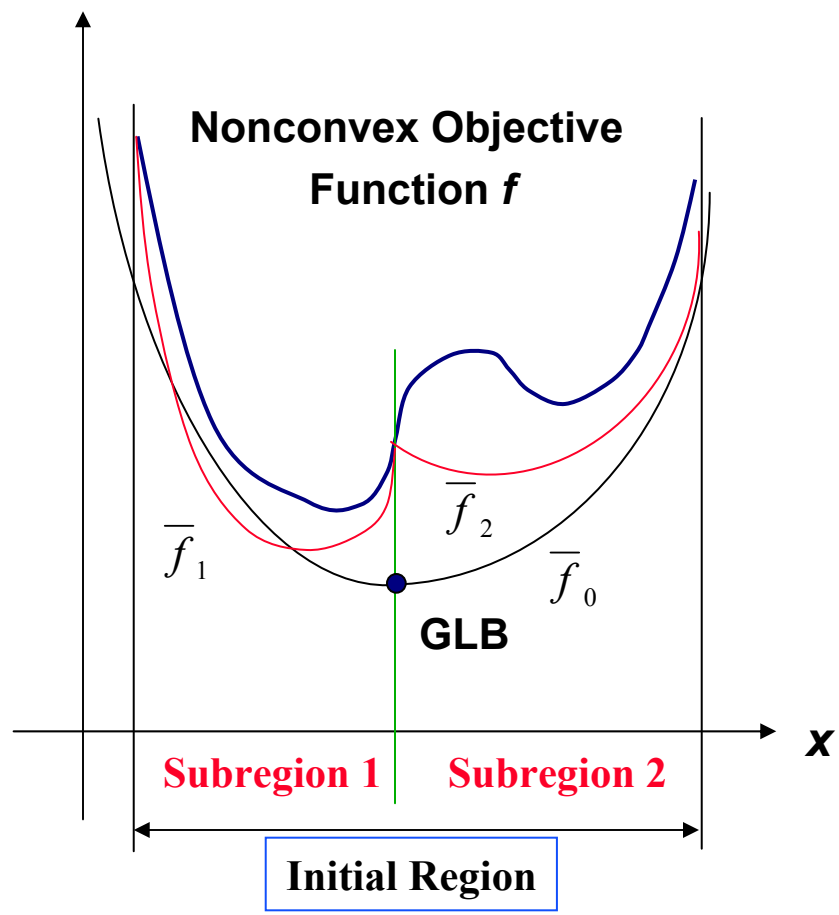

Upper Bound Solution

Cost = $ 277,928 (by GAMS/DICOPT++)

- **Use 4 Stages (6 units) without Storage Tank**

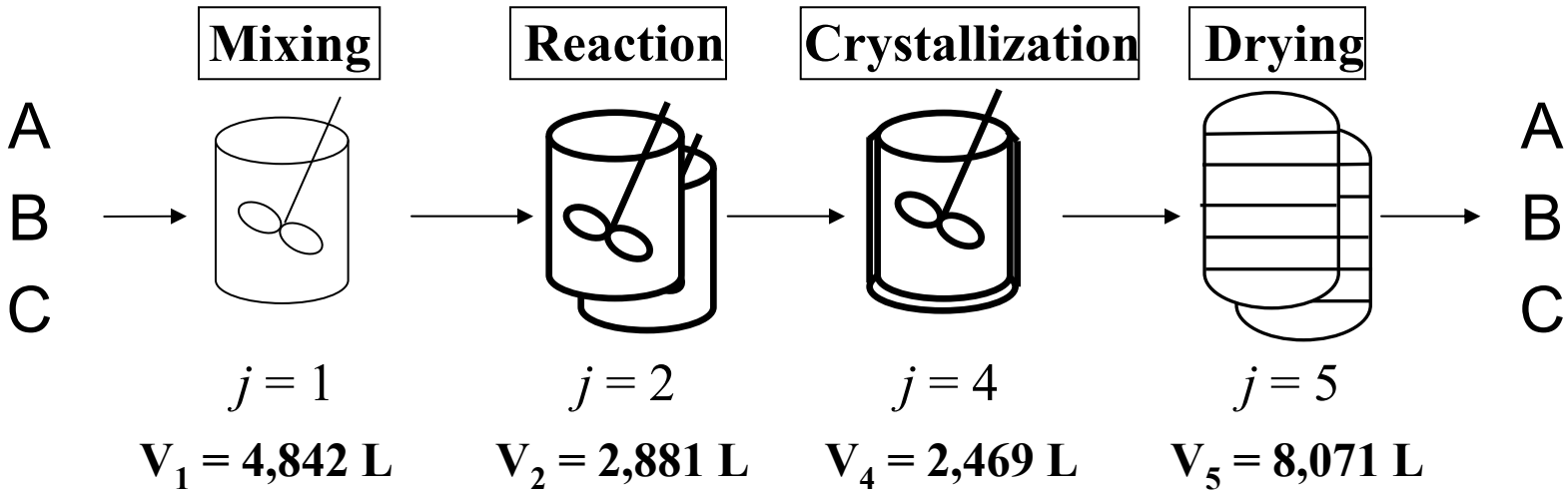

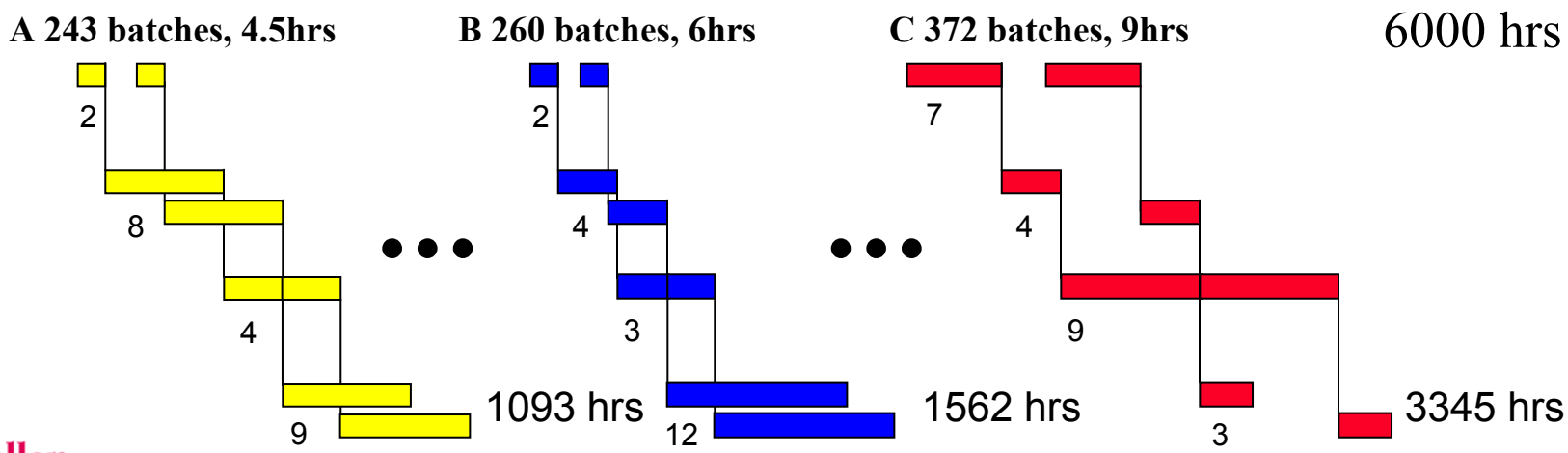

Optimal Solution: Multiproduct Batch Plant

- **Global optimal cost = $ 264,887 (5% improvement)**
- **3 Stages + 1 storage tank (5 units)**

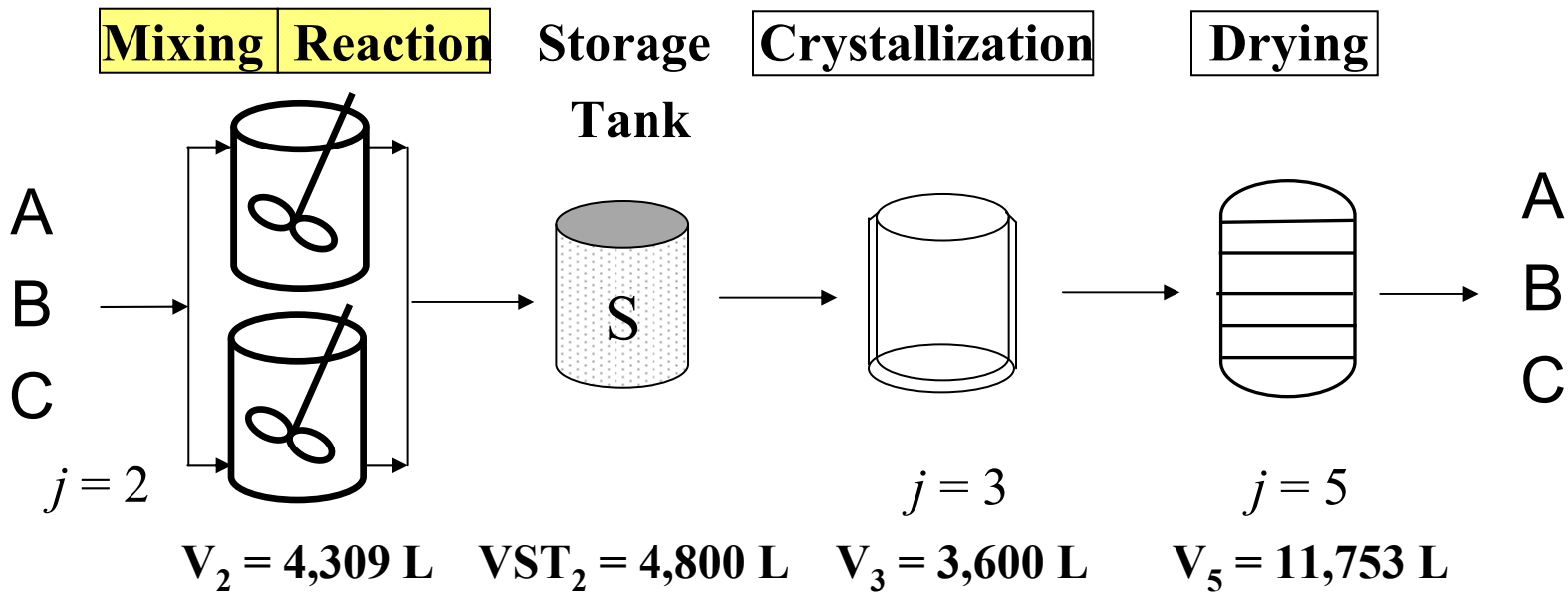

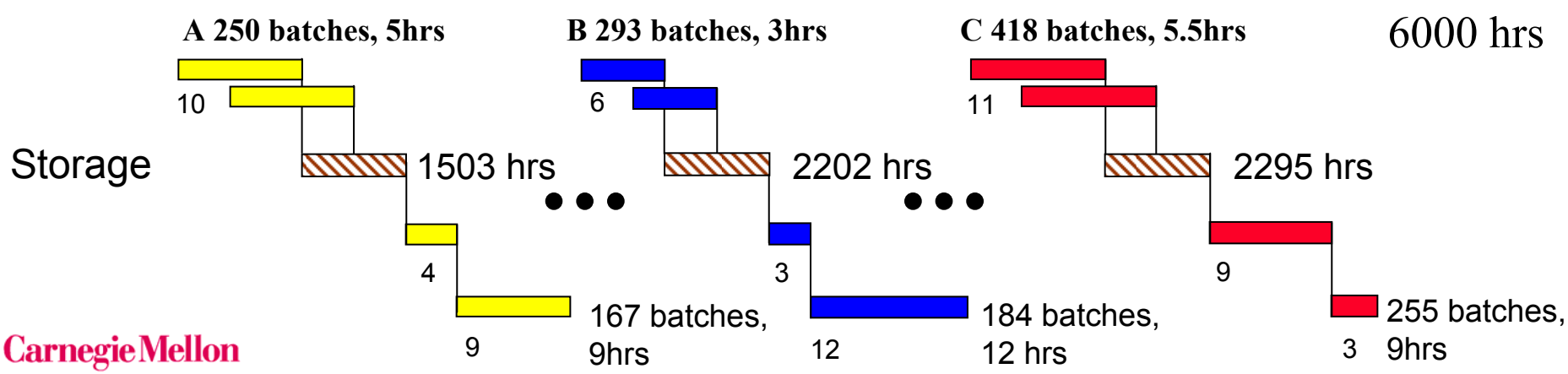

Environmentally Conscious Design and Planning of Hydrogen Supply Chains for Vehicle Use

Guillén-Gosálbez, Mele and Grossmann (2009)

Motivation

- Motivation for the adoption of hydrogen:

  Reduces well-to-wheel GHG gases emissions *(Hugo et al., 2006)*

- Major obstacle to achieve the hydrogen transition (Jensen and Ross, 2000)

  Developing an efficient infrastructure for producing and delivering hydrogen

Objective:

Develop a framework for the design of infrastructures for producing and delivering H_2

- Cover the entire supply chain (holistic view of the system)
- Include environmental concerns along with traditional economic criteria
- Develop an efficient solution method

Basis: case study by A. Almansoori and N. Shah (2006) in UK

Problem statement

Design of SCs for hydrogen production

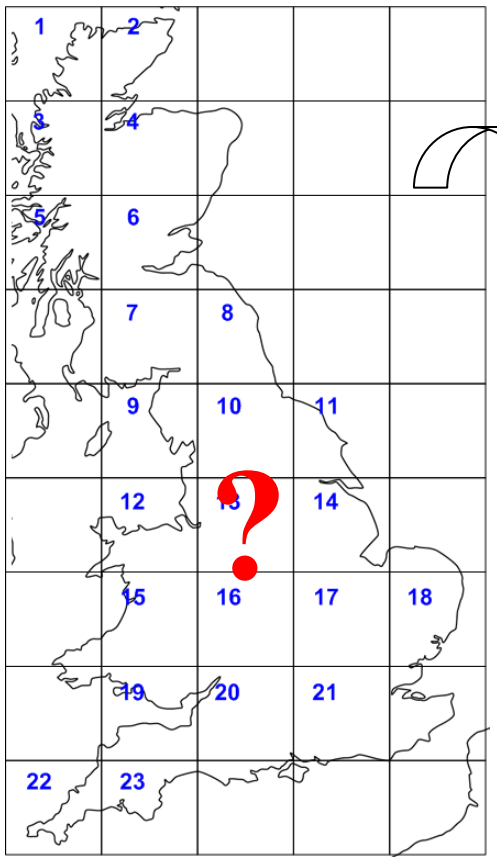

Production

- Steam methane reforming
- Coal gasification
- Biomass gasification

Transportation

- Liquid hydrogen (LH) tanker truck
- Liquid hydrogen (LH) railway tank car
- Compressed-gasous hydrogen (CH) tube trailer
- Compressed-gaseous hydrogen (CH) railway tube car

Storage

- Liquid hydrogen (LH) storage
- Compressed gas (CH) storage

- **Given are:**
  - ✓ **Demand of hydrogen**
  - ✓ **Investment and operating costs**
  - ✓ **Available technologies and potential locations (i.e., grids)**
  - ✓ **GHG emissions associated with the SC operation**

- **The task is to determine the optimal SC configuration**

- **In order to minimize cost and environmental impact**

Bi-criterion MILP Model

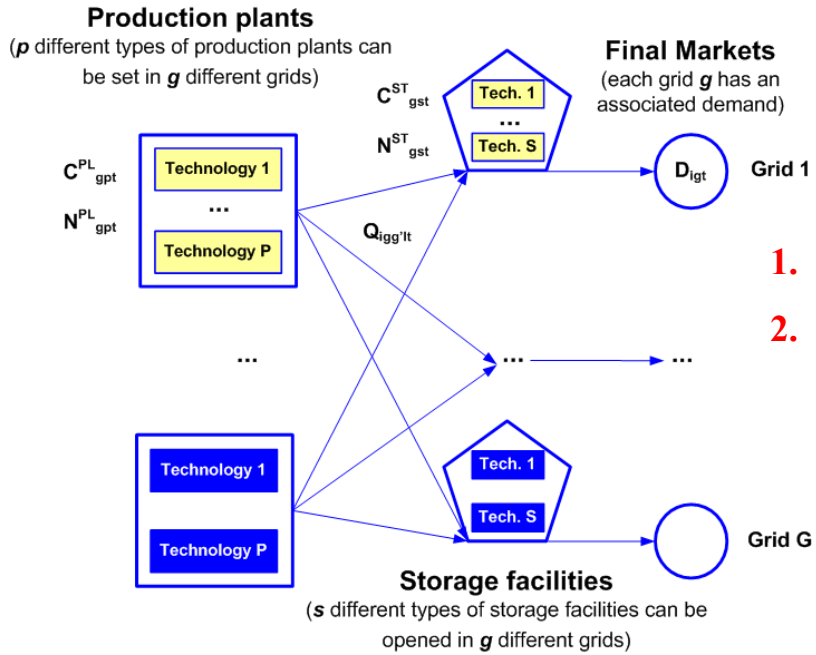

1. Postulate a superstructure with all possible alternatives
2. Build an MILP model with:
   - Economic and Environmental objective functions

Min Cost
Min Environmental impact

s.t. Mass balances (defined for every grid)

Capacity constraints (production and storage)

Capacity constraints (transportation)

0-1 vars choices, cont vars flows

Environmental aspects based on LCA (Eco-Indicator 99)

Life Cycle Analysis-LCA

(ISO 14040 series on LCA)

→ **Objective strategy to evaluate the environmental loads associated with a product, process or activity**

↓ **by quantifying energy and materials used and waste released**

→ **to evaluate opportunities to do improvements**

↓ **It includes the ENTIRE LIFE CYCLE of the product**

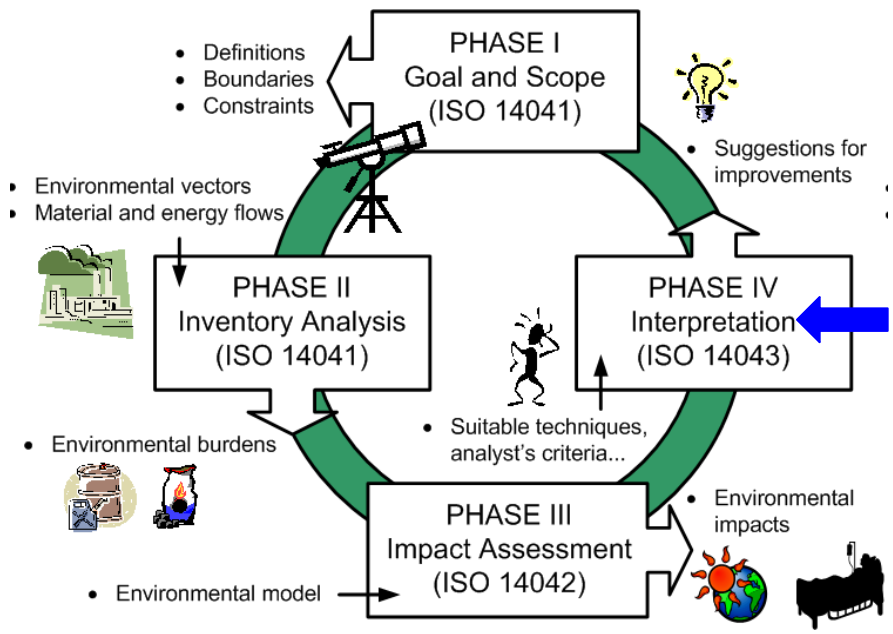

Combine LCA with optimization tools

(Azapagic et al., 1999, Mele et al., 2005, Hugo and Pistikopoulos, 2005)

Environmental damage assessment: Global warming

1. Calculate the GHG emissions (Life Cycle Inventory: analysis from the cradle to the grave)

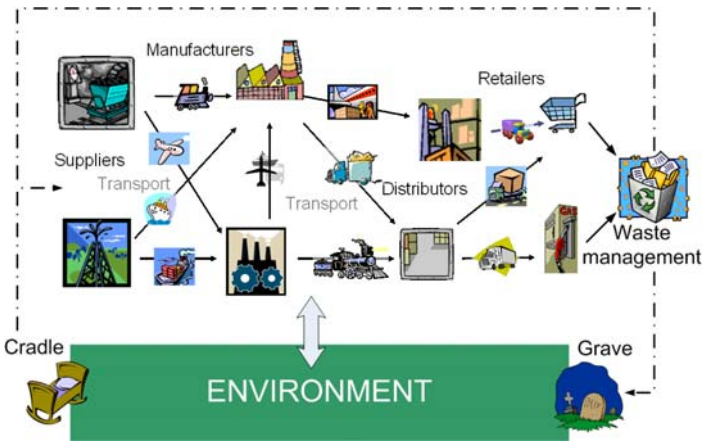

$$LCI_b = \sum_i \sum_g \sum_p \sum_t PR_{igpt}(\omega_{bp}^{PR} + \omega_{bi}^{ST}) + \sum_i \sum_g \sum_{g' \neq g} \sum_{l \in LI(i)} \sum_t Q_{igg'lt}\omega_b^{TR} \quad \forall b$$

Storage (compression of hydrogen)

Production (raw materials, energy consumption and direct emissions)

Transportation tasks

2. Translate emissions into damage (damage to human health caused by climate change)

- **Human health:** DALYs (Disability Adjusted Life Years)

$$DAM = \sum_b v_b LCI_b$$

Damage factors translate life cycle inventory into impact

Solution strategy: Epsilon constraint

Bi-criterion MILP with economic and environmental concerns

$$\min_{x,X,N} \quad (TDC(x,X,N), DAM(x,X,N))$$
$$\text{s.t.} \quad g(x,X,N) \leq 0$$
$$h(x,X,N) = 0$$
$$x \in \mathbb{R}, X \in \{0,1\}, N \in \mathbb{N}$$

Pareto-optimal solutions: Epsilon constraint method

Solve a set of single objective problems for different values of ε

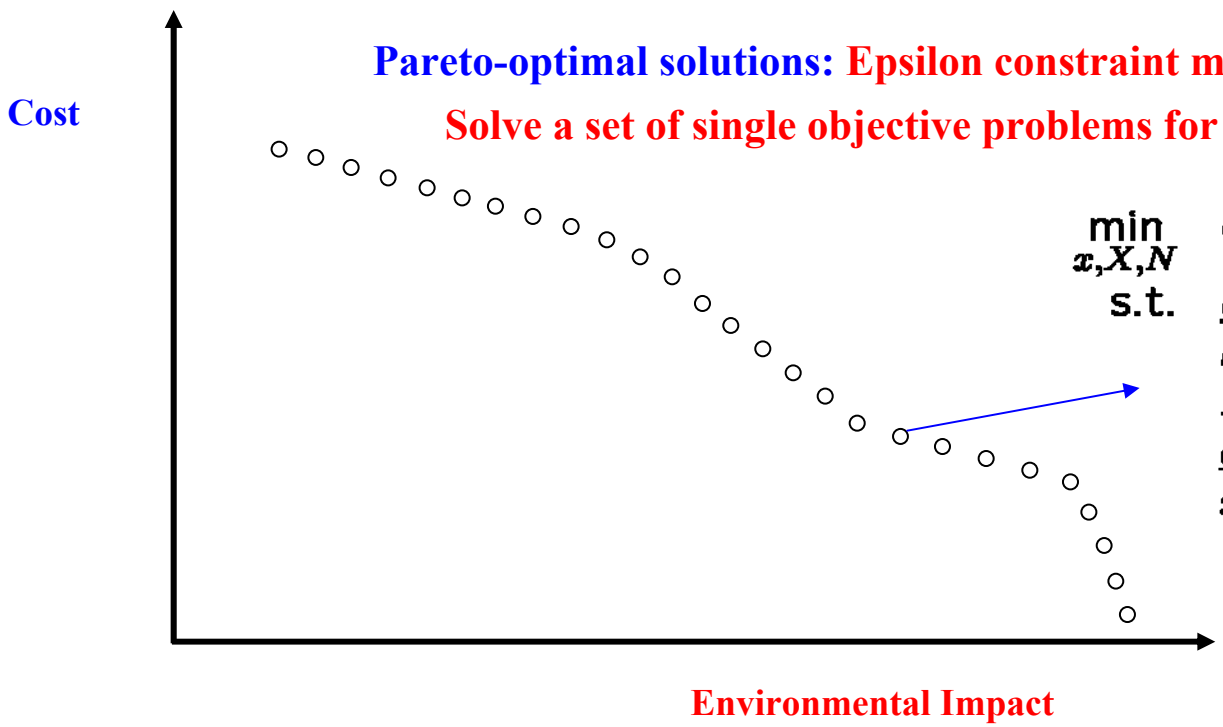

$$\min_{x,X,N} \quad (TDC(x,X,N))$$
$$\text{s.t.} \quad g(x,X,N) \leq 0$$
$$h(x,X,N) = 0$$
$$DAM(x,X,N) \leq \epsilon$$
$$\underline{\epsilon} \leq \epsilon \leq \overline{\epsilon}$$
$$x \in \mathbb{R}, X \in \{0,1\}, N \in \mathbb{N}$$

Pareto set of alternative solutions

Environmental improvements are achieved through technological and topological changes

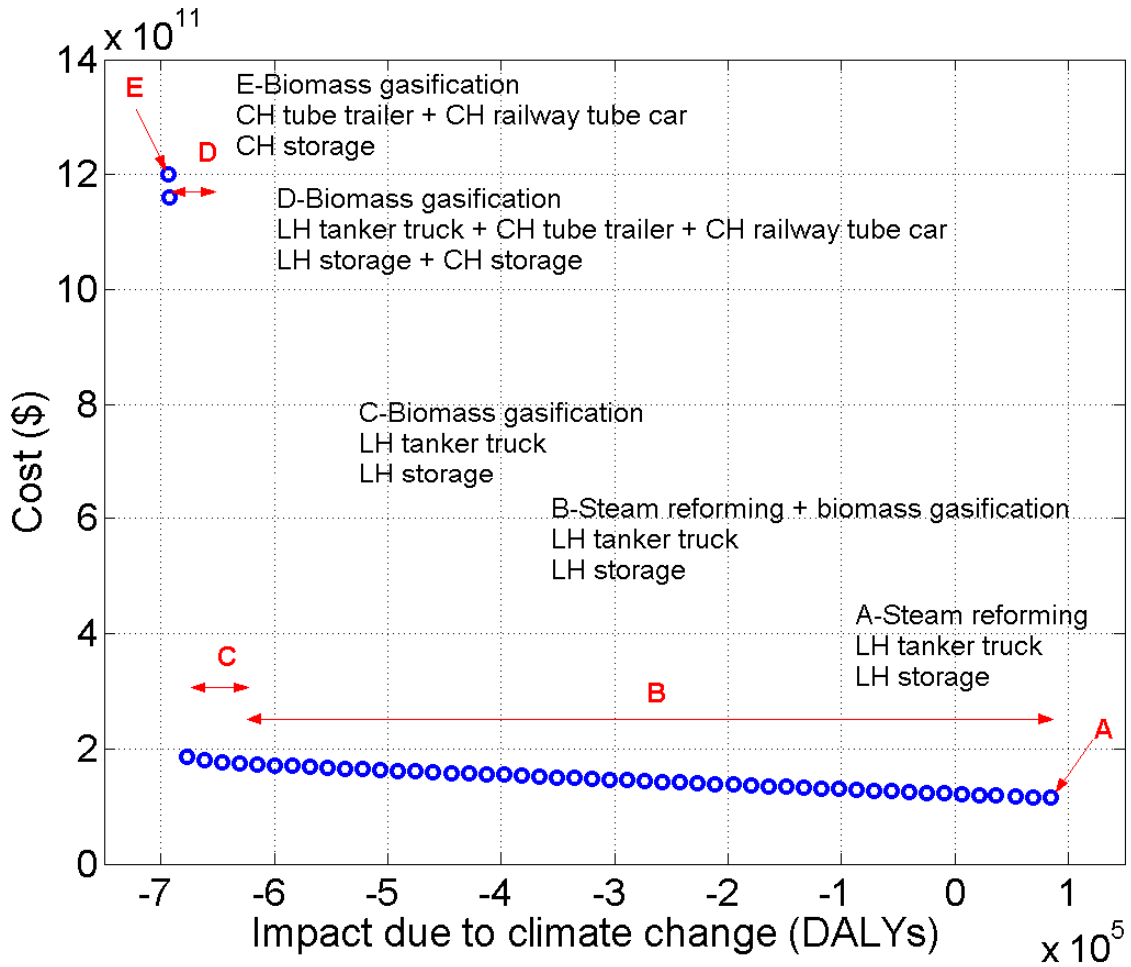

- **Replace steam reforming by biomass**
- **Do not use compressed gaseous hydrogen (too expensive)**

Extreme solutions

Decentralized networks decrease the environmental impact

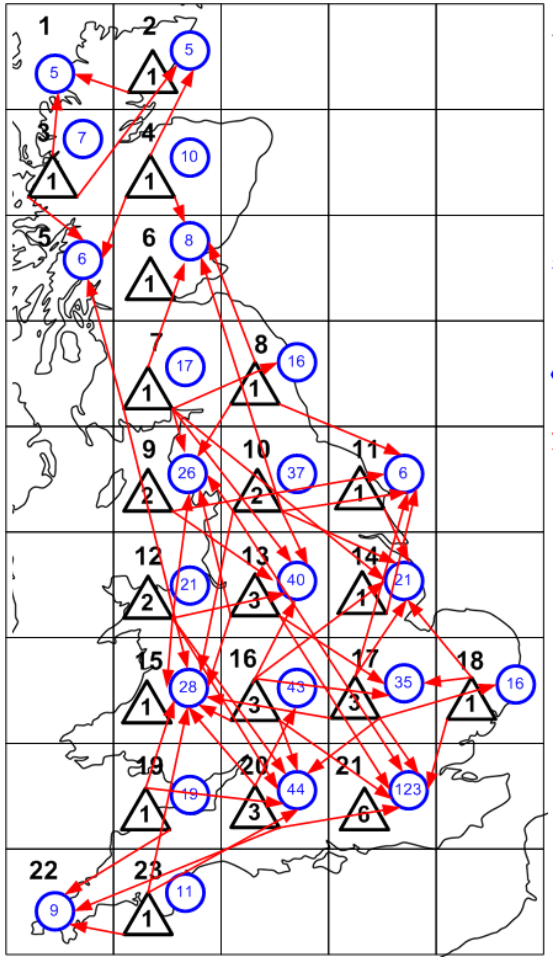

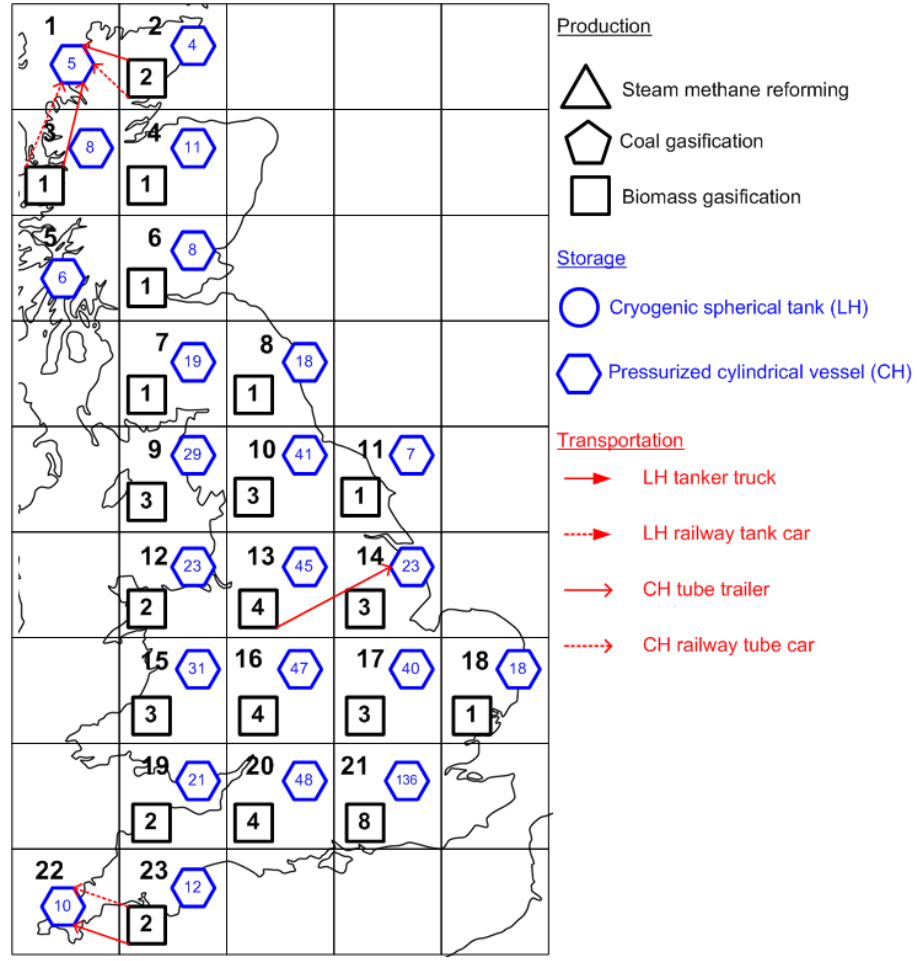

MINIMUM COST: more centralized network (economies of scale)

MINIMUM IMPACT: more decentralized network (reduces transportation emissions)

Carnegie Mellon

Concluding Remarks

1. Process synthesis: challenging problem that lies at heart of design and that is key to address sustainability problems

2. Process synthesis has greatly advanced in representations and optimization methodologies

3. Advances in mixed-integer/disjunctive programming have provided a powerful framework for addressing synthesis problems

4. Many problems can be effectively addressed
   HENs, Water networks, steam and power plants, separations systems
   Process flowsheets

5. Challenges: *uncertainty, process intensification, nonliner modeling*